RX1-NV LCD

User Manual

R.V.R. ELETTRONICA

File name: capitoli_en.p65

Version: 1.2

Date: 13/12/2001

Revision History

Version	Date	Reason	Editor
1.2	13/12/2001	Update of the technical appendix	J. Berti

RX1-NV LCD - User Manual
Version 1.2

© Copyright 1999-2001
R.V.R. Elettronica SpA
Via del Fonditore 2/2c - 40138 - Bologna (Italia)
Telefono: +39 051 6010506
Fax: +39 051 6011104
Email: info@rvr.it
Web: www.rvr.it

All rights reserved
Printed and bound in Italy. No part of this manual may be reproduced, memorized or transmitted in any form or by any means, electronic or mechanic, including photocopying, recording or by any information storage and retrieval system, without written permission of the copyright owner.

Table of Contents

1.	**Preliminary Instructions**	**1**
2.	**Warranty**	**3**
3.	**First Aid**	**5**
3.1	Treating electric shocks	5
3.2	Treating electric burns	6
4.	**General Description**	**7**
5.	**Quick Start**	**9**
5.1	Using the encoder	9
5.2	Preparation	10
5.3	Operation	10
5.3	Adjusting	13
6	**External Description**	**15**
6.1	Front panel	15
6.2	Rear panel	16
6.3	Connectors description	16
7.	**Operating System**	**19**
7.1	Exchange menu (“Exit”)	20
7.2	Board Set	20
7.3	General Setting	20
7.4	Auto	21
7.5	Alarm	22
7.6	Meter	24
7.7	Diagnostics	25
7.8	Power Supply	25
7.9	Stereo Set	25
8.	**Technical Specifications**	**27**
8.1	Physical specifications	27
8.2	Electrical Specifications	27
9.	**Internal Description**	**29**
9.1	Modules Identification	29
9.2	Configuration	30
9.3	Frequency setting for tuned front-end	30
	Appendix:	
	Component layouts, schematics, bills of material	

This page was intentionally left blank

1. Preliminary Instructions

This manual is designed to provide a general guide to skilled and qualified personnel, who are aware of the dangers that may arise when handling electric and electronic circuits.

It does not aim to provide a complete description of all the safety precautions that must be observed by people who use this or similar equipment.

The installation, operation, maintenance and use of this equipment involve risks both for people and the equipment itself, which must be handled only by experienced technicians.

R.V.R. Elettronica SpA does not assume responsibility for injuries to persons or damage to items caused by improper use or incorrect usage procedures, whether the users are experienced or not.

Users should observe local regulations and fire-prevention rules while installing and using this equipment.

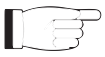

WARNING: always disconnect the power before opening covers or removing any part of the equipment.
Take appropriate earthing measures to discharge the condensers and high voltage points before doing any maintenance work.

WARNING: this equipment may radiate radio-frequency energy, and if it is not installed according to the instructions, may cause troublesome interference to radio communications.
Operating this equipment in a residential environment may give rise to radio disturbance; if so, the user may be asked to take appropriate counter measures.

R.V.R. Elettronica SpA reserves the right to make modifications to the design and technical specifications of the equipment, and to update this manual without notice.

This page was intentionally left blank

2. Warranty

The guarantee, which is for 12 (twelve) months, is valid for any R.V.R. Elettronica product.

On components such as valves for finals, the manufacturer's guarantee applies.

R.V.R. Elettronica extends all transferable original guarantees to its own products. To ensure that servicing is carried out properly and as fast as possible, the work shall be handled by R.V.R. Elettronica; any claims should be sent directly to R.V.R. Elettronica, in accordance with the defined procedures.

The warranty does not include:

1 damage while the equipment is being shipped to R.V.R. for repairs;

2 any unauthorized modification or repair;

3 accidental damage, or damage not due to defects in the equipment;

4 nominal damage not accidental;

5 shipping the equipment and insuring it, and replacement of parts or units.

Any damage to the equipment caused during shipment must be reported to the transporters and notified in writing on the forwarding receipt.

Any difference or damage discovered after delivery must be reported to R.V.R. Elettronica within 5 (five) days from the delivery date.

To take advantage of the guarantee, adopt the following procedure:

1 Contact the retailer or dealer where you bought the equipment; describe the problem or fault to check if there is a simple solution.

Retailers and Distributors can provide full information on the problems that occur most frequently; they can normally repair the equipment much faster than the manufacturer

2 If your dealer cannot help you, contact R.V.R. Elettronica and describe the problem to them; if necessary, you will be sent authorization with the necessary instructions;

3 When you have received authorisation, return the equipment carriage paid to the address specified.

Pack it carefully, if possible in the original packing, and seal the package.

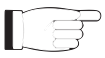

Do not return the machine without prior authorization, otherwise it may be returned to you

4 Quote the machine's type, model and serial number; attach a written technical diagnosis listing all the problems and faults encountered, and enclose a copy of the invoice.

Replacement of parts under guarantee or spare parts can be ordered from the following address:

R.V.R. Elettronica SpA
Via del Fonditore, 2/2c
40138 BOLOGNA
ITALY
Tel. +39 051 6010506

quoting type, model and serial number of the device.

3. First Aid

Personnel involved in the installation, use, and maintenance of the equipment must be familiar with the theory and practice of first aid.

3.1 Treating electric shocks

3.1.1 If the victim is inconscious

Follow the first aid principles described below.

- Lay the victim down on his back on a rigid surface
- Free the respiratory tracts by raising the neck and pushing the forehead back (Figure 1).
- If necessary, check the breathing of the victim opening his mouth.
- If the victim is not breathing, start artificial respiration immediately (Figure 2): incline the head, close the nostrils, apply your mouth to the victim's and make four fast respirations.

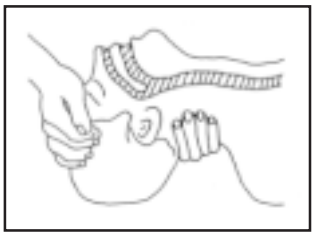

Figure 1

Figure 2

- Check the heart beat (Figure 3); if there is none, start a cardiac massage immediately (Figure 4) pressing the sternum approximately at the centre of the chest (Figure 5).

Figure 3

Figure 4

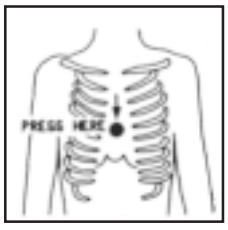

Figure 5

- If there is just one person providing first aid, he must adopt a rhythm of 15 compressions and 2 fast respirations alternately.
- If there are two persons, the rhythm must be 1 respiration and 5 compressions alternately

- Do not interrupt the cardiac massage during the artificial respiration.
- Call a doctor as soon as possible

3.1.2 If the victim is conscious

- Cover the victim with a blanket
- Keep him calm.
- Loosen the victim's clothes and keep him lying down
- Call a doctor as soon as possible

3.2 Treating electric burns

3.2.1 Large-scale burns and serious cuts

- Cover the area concerned with a sheet or a clean cloth.
- Do not break the blisters; remove any fabric and parts of clothing that may be attached to the skin; apply a suitable ointment.
- Treat the victim depending on the type of accident.
- Take the victim to hospital as soon as possible.
- If the arms and legs are injured, keep them raised.

If no medical help is available within an hour and the victim is conscious and has not retched, administer a liquid solution of salt and bicarbonate of soda: 1 teaspoonful of salt to every 250ml of water.
Get the victim to slowly drink half a glass of the solution, four times, over a period of 15 minutes.
Stop the treatment if the victim starts to retch.

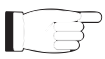

Do not administer alcoholics!

3.2.2 Less serious burns

- Apply cold gauze compresses (not iced) using a clean cloth (i.e. as clean as possible).
- Do not break any blisters; remove any fabric and parts of clothing that may be attached to the skin; apply a suitable ointment.
- If necessary, dress the victim in clean dry clothes.
- Treat the victim depending on the type of accident.
- Take the victim to hospital as soon as possible.
- If the arms and legs are injured, keep them raised.

4. General Description

RVR Elettronica's RX1-NV is a professiona FM receiver with harmonic distortion lower than 0.1%. Its audio characteristics make it suitable for broadcasting applications, where high fidelity performances are needed.

Its external box is 2HE high and mountable on standard 19" racks.

The user interface comprises a graphic LCD display and a knob (encoder). Using this elements, it is possible to read all the working parameters of the device and to modify the changeable parameters, for example the working frequency or the audio output configuration.

In the standard version of the receiver, the demodulated signal is provided to the user in the form of MPX (that is, the composite baseband signal) as well as in the form of mono. There are also two connectors for the output of RDS or SCA subcarriers.
As an option, the RX1-NV can be equipped with a stereo decoder section. In this version, the output of the device comprises the left and right channels, the MPX signal and the possible subcarriers.

Two types of RF front-end sections are available.
The standard version employes a RF filter that is tuned on the working frequency; this kind of front-end is particularily suitable when the receiver is part of a retransmitting system, since it gives the best quality in the received signal.
Optionally, the RX1-NV can be equipped with an input section featuring a RF filter that is automatically tuned by the control software when a certain working frequency is selected. This kind of front-end also includes a double antenna input; the used antenna input is selectable via software.

The RX1-NV is designed in a modular way: the different functionalities are performed by modules that are directly connected with male and female connectors or using connector-terminated flat cables. This kind of design facilitates the maintenance or the possible substitution of the modules.

The receiver's control software implements an alarms system that is completely user-configurable. Among the possibilities, an important one is the capability of changing the working frequency if an alarm is raised.

The RX1-NV can also be fitted with a RDS board, than enables the user to controlthe different RDS parameters and to manage alarms as a function them.

The RX1-NV offers an auxiliary audio input, that is particularily useful when one doesn't want to let silence intervals to go on air: if an audio signal is connected to this input, it will be routed to the audio output of the receiver as soon as the muting function is triggered.

This page was intentionally left blank

5. Quick Start

This chapter gives a concise view of the points that are necessary for the installation of the device. If any item is not completely clear, for example when you use the receiver for the first time, we strongly suggest to read throughly the manual and the description of the operating system.

5.1 Using the encoder

The interaction between the user and the receiver's control software is performed using the encoder (fig. 5.1).

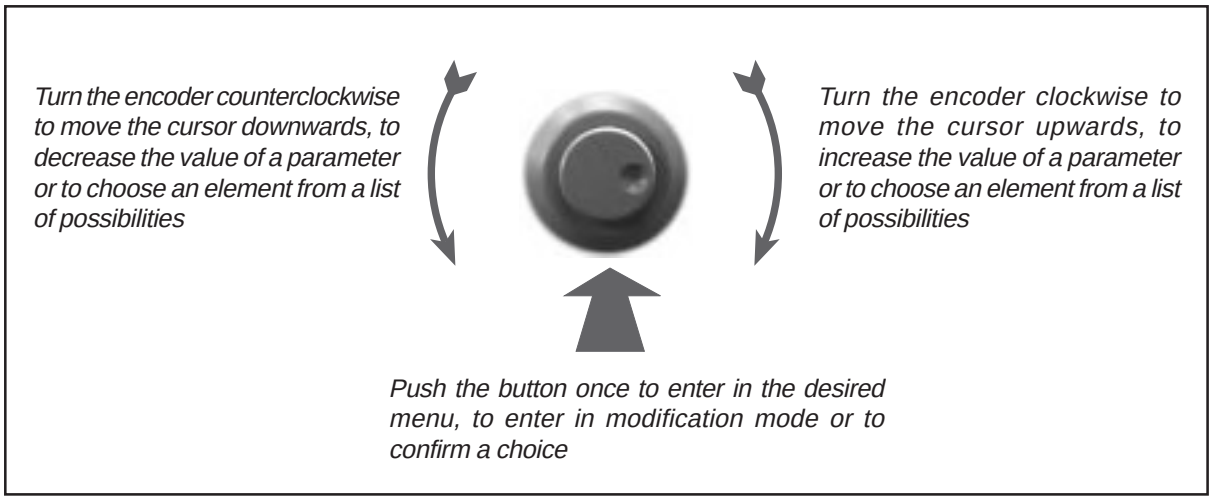

Figure 5-1

The operations supported by the encoder are:

- **rotation**: moves the cursor shown on the display; if you turn the encoder to the left (counterclockwise), the cursor moves downwards, if you turn it right the cursor moves upwards; it also permits to increase or diminish the parameters (turning the encoder left diminishes the parameter, turning it right increases it) or to select an item form a list of options
- **pushing**: push the button once when the cursor is on the name of a menu to enter in that menu, push it when the corsor is on the name of a parameter to enter in modification mod (the cursor starts blinking); after the modification of a parameter, push the button to save the new value.

  After having modified the value of a parameter, the cursor goes on blinking for approximately 30 seconds, waiting for confirmation from the user. If the user doesn't confirm the new value (i.e., the button is not pressed), the device emits a sound to indicate that no modification has been saved; the cursor stops blinking and remains on the selected parameter.

5.2 Preparation

Unpack the receiver and before any other operation make shure that no damage due to the transport is present. In particular, inspect the conditions of all the connectors.

Check if the mains voltage is correct for your site. The selector is on the rear panel and the selected value is indicated by an arrow. If required, extract the fuse/selector block levering with a little screwdriver. Rotate the block until the correct printed value corresponds with the arrow, then reinsert it.

The correct value for the mains fuse is 2 A.

Verify that the mains switch of the unit is on the OFF position.

Connect to the RF input of the receiver the antenna cable. If your receiver includes the double RF input option and you use only one antenna, we suggest to use the input called A1.

Connect the mains power supply cable to the relative socket.

NOTE: this piece of equipment shall be correctly connected to earth. This is necessary both for safety reasons and to obtain the receiver's correct performances.

Finally, connect the audio output of the receiver to the devices that will use it, depending on the configuration of your installation.

5.3 Operation

Warning: Before using the receiver for the first time, we suggest to get familiar with the machine's control system reading this manual in full, and specifically chapter 7 (operating system).

Switch the receiver on using the switch on the front panel.

At start up, all the LEDs on the front panel are briefly switched on to permit the verification of their functionality. The display then shows some information regarding the model of the device (fig. 5.2).

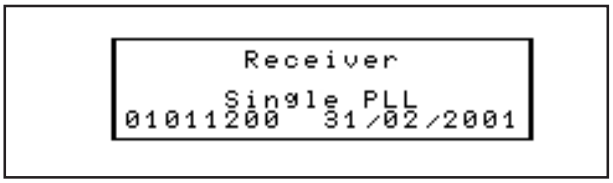

Figure 5-2

If the receiver is working correctly, the LEDs “alarm” and “waiting” will be off. The respective meanings are that the power supply is correct, and that the PLL is locked on the working frequency.

At this point, the software enters the main cycle, displaying the default screen.

Figure 5-3

The default screen can be divided in the following part:

- Left column: status icons. The icons that can be shown are the following:
  - The PLL is locked
  - This icon is present if the receiver is working on the backup setup (frequency and antenna)
  - Indicates that the working frequency is centered with respect to the received carrier
  - This icon means that the auxiliary input is routed to the audio output. This situation is bound to the intervention of the muting functionality.
  - This icon is present if the received program is stereo (only with Stereo decoder or/and RDS decoder options)
  - Indicates that the RDS signal is correctly received (only with RDS decoder option)
- On the right of the icons, there is a double VU-meter column that indicates the instantaneous modulation level. 100% in this scale corresponds to a standard 75 kHz modulation
- The upper part of the screen contains the following indications:
  - Working frequency (modifiable)
  - Antenna used (A1 or A2, modifiable only when the tuneable RF front-end is present)
  - Offset between set and received frequencies
  - Analog representation of the received signal level
  - Muting level setting
- In the lower part of the screen, there is a bar (inverted visualization) indicating the status of the automatic managment system of the machine

  `Mut` This is the “muting” status. `Off` indicates that the muting function is idle, so that at the receiver’s output there is the received signal; `On` indicates that the muting is activated, so that the receiver’s output is silenced, or replicates the Aux In, if such input is used.

Note: the visualization of the following states is enabled only if the receiver is configured for automatic alarms management

- `Ant` "Antenna": `Off` indicates that automatic commutation on the backup setup (frequency and antenna) is disabled. It corresponds to the menu item `Admin –> Auto –> Auto Off`
- `Sig` "Signal", indicates the activation (`On`) of the automatic system depending on the receiver signal level. It corresponds to the menu item
  `Admin –> Alarm –> Signal Alm –> Rescue`
- `Aud` "Audio", indicates the activation (`On`) of the automatic system depending on the demodulated audio level in the received signal. It corresponds to the menu item
  `Admin –> Alarm –> Audio Alm –> Rescue`
- `Ste` "Stereo", indicates the activation (`On`) of the automatic system depending on the pilot tone level in the received signal. It corresponds to the menu item
  `Admin –> Alarm –> Stereo Alm –> Rescue`
- `RDS` "RDS", indicates the activation (`On`) of the automatic system depending on the correctness of the received RDS frames. It corresponds to the menu item
  `Admin –> Alarm –> RDS Alm –> Rescue`

- In the right part of the default screen there is the menu item (`[Admin]`) that permits to go on to the administration menus. This element is visible only when one is in "input mode", that is when the encoder is moved.

Tipically, the operations that are necessary to perform at the first start-up of the receiver are the following:

- (Only if automatic alarms management is enabled) - Verify in the status bar of the default menu that the audio output "`AFO`" is set on "`Rec`" and that the various automatic settings are all disabled (`Off`)
- (Only if the tunable front-end is present) - With the encoder, select the antenna input to be used. Each time you push the encoder the antenna input is switched
- Set the working frequency:
  - with the encoder select in the default menu the item "frequency"
  - push the encoder to enter in the frequency modification menu
  - push the encoder on the frequency value to enter in modification mode
  - turn the encoder until the desired frequency is reached; when the set frequency is at the center of a received radio station, the icon ▸◂ is shown.
  - push the encoder to store the new frequency
  - confirm your choice pushing the encoder on "`Yes`"
  - push the encoder on "`Exit`" to go back to the default screen

- Set the desired muting level as described hereafter:
  - with the encoder, select in the deafult screen the line related to the muting level
  - push the encoder to enter in edit mode
  - rotate the encoder to select the desired muting level
  - push the encoder to store your selection

  Plese remember that if you feed the receiver with an audio signal using the Aux In input, when the muting function is activated the supplied audio signal is routed to the receiver's output. If no auxiliary audio is used, the muting intervention will just produce silence at the output.
- If it is necessary, check the settings of the audio section (`ADMIN` –> `BdSet`) and of the stereo board if it's present (`ADMIN` –> `StSet`). To know more about these menus, please check chapter 7.
- If the device is configured for automatic alarms management, set the related parameters. For details, see chapter 7.

5.3 Adjusting

The only adjustments that have to be manually done on the RX1-NV are those related to the output levels.

On the rear panel, you will find a trimmer for each of the independent output. When you insert the receiver in a system, you will have to adjust the level depending on your system configuration.

On the front panel there is a mono jack plug for phone output. Above the plug, a trimmer permits to adjust the level.

Using the software, it's possible to adjust all the parameters of the alarm system. The different parameters and the working principles of the alarm system are described in chapter 7.

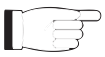

For receivers fitted with tuned RF front-end, changing the working frequency requires the intervention of technically skilled personnel and the use of suitable instruments. The procedure to be used is described in chapter 9.

This page was intentionally left blank

6 External Description

This chapter describes the different elements that can be seen on the front and rear panels of RX1-NV.

6.1 Front panel

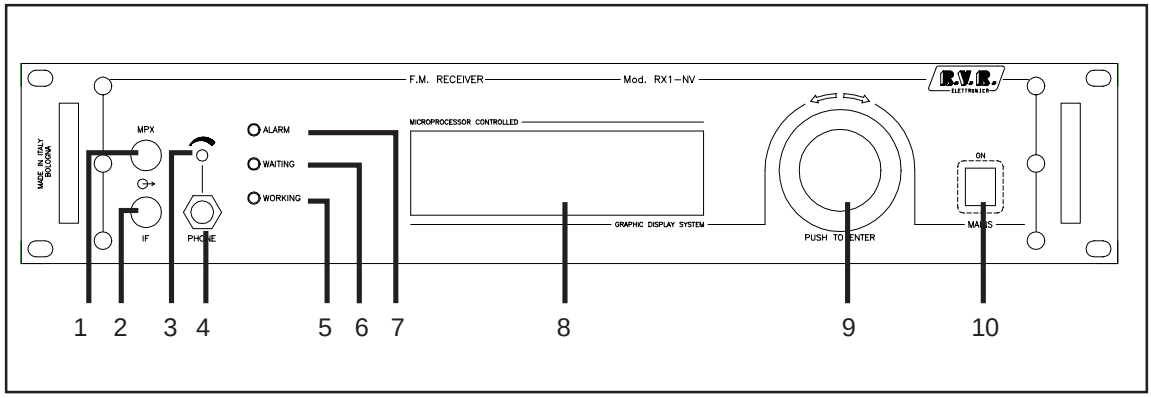

Figure 6-1

[1]	MPX	MPX Output Monitor BNC connector
[2]	IF	IF monitor BNC connector
[3]	VOL	Regulation trimmer for the phone plug
[4]	PHONE	Jack plug for phone output
[5]	WORKING	Green LED, lit when the device is working
[6]	WAITING	Yellow LED, lit when the receiver is waiting for the PLL to lock
[7]	ALARM	Red LED, lit if the receiver is out of order
[8]	DISPLAY	LCD graphic display
[9]	ENCODER	Knob/button to control the machine
[10]	MAINS	Mains supply switch

6.2 Rear panel

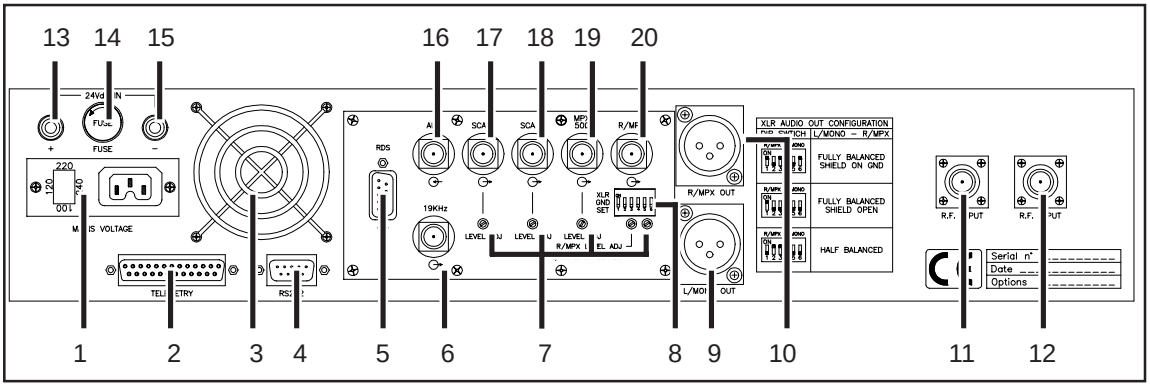

Figure 6-2

[1]	PLUG	mains plug with fuse and voltage changer
[2]	TELEMETRY	DB25 female connector for telemetry signals
[3]	FAN	fan for forced ventilation
[4]	RS232	DB9 female connector for direct or modem serial communication
[5]	RDS	DB9 female connector for RDS output (if installed)
[6]	19KHz	BNC for regenerated 19 kHz subcarrier
[7]	Trimmers	Output level adjusting trimmers
[8]	Dip Switch	miniswitch for XLR connectors grounding configuration
[9]	L/Mono	XLR connector for Left/Mono output
[10]	R/MPX	XLR connector for Right/MPX output
[11]	ANTENNA	N-type connector for antenna input (A1)
[12]	ANTENNA	N-type connector for antenna input (optional, A2)
[13]	24V +	24Vcc positive input connector (red)
[14]	FUSE	Vcc supply fuse
[15]	24V -	24Vcc negative input connector (black)
[16]	AUX IN	Auxiliary audio input
[17]	SCA 1	BNC connector for SCA/RDS output
[18]	SCA 2	BNC connector for SCA/RDS output
[19]	MPX 50 Ω	demodulated MPX signal output, buffered to drive a 50 Ω load with up to 250 mt RG58 cable
[20]	R/MPX	BNC connector for Right/MPX output (in parallel with [10])

6.3 Connectors description

6.3.1 Audio output

Type: XLR female

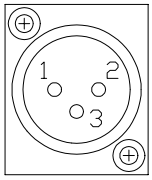

1 Ground
2 Signal (+)
3 Signal (-)

This description is valid for balanced configuration.
In unbalanced configuration, pin 3 is at ground.
The possible configurations of XLR connectors are described on the rear panel.

6.3.2 Telemetry

Type: DB25 female

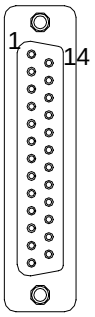

	Standard version	With alarms card options
1	GND	GND
2	N.A.	Signal level alarm
3	N.A.	Signal level alarm
4	V Field (Analog O)	V Field (Analog O)
5	Reset CPU if grounded	Reset CPU if grounded
6	I2C SDA	I2C SDA
7	I2C SCL	I2C SCL
8	Mutes the output if grounded	Mutes the output if grounded
9	GND	Mute alarm
10	Mute demodulatore (TTL O)	Mute alarm
11	N.A.	Pilot level alarm
12	GND	Pilot level alarm
13	GND	RDS level alarm
14	N.A.	RDS level alarm
15	N.A.	RDS PI alarm
16	N.A.	RDS PI alarm
17	GND	Receiving on antenna 2 alarm
18	GND	Receiving on antenna 2 alarm
19	I2C GND	I2C GND
20	GND	GND
21	Mutes the demodulator if grounde	Mutes the demodulator if grounded
22	Frequency unlocked (TTL O)	Receiver fault alarm
23	GND	Receiver fault alarm
24	N.A.	Audio level alarm
25	GND	Audio level alarm

The alarm pins on the optional board are of the type “dry contact”.

This page was intentionally left blank

7. Operating System

The receiver's control software structure is divided into a default menu and a series of administration menu (figure 7.1). One of the default menu items ([ADMIN]) permits to pass to the administration menus.

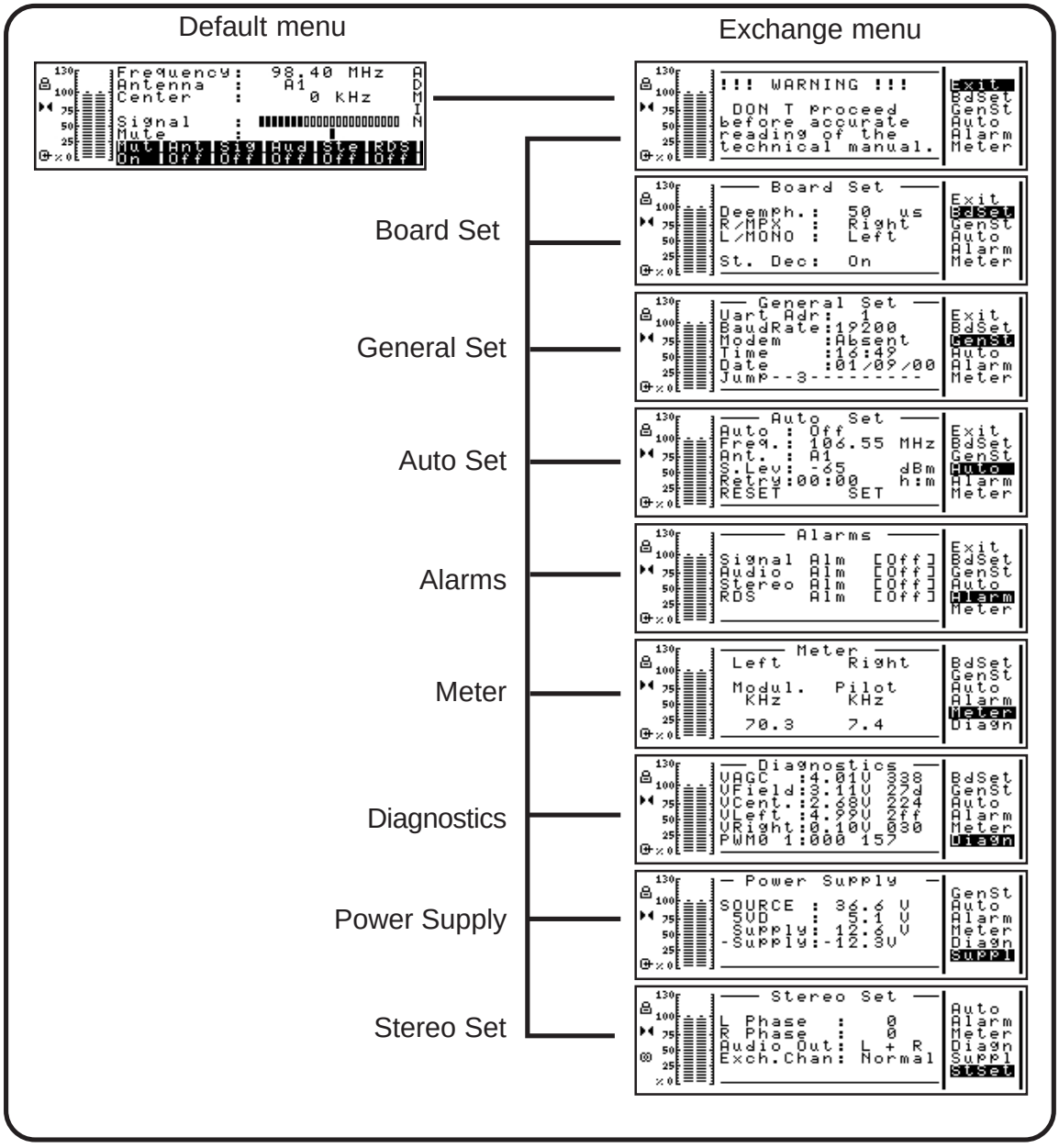

Figure 7-1

For the description of the default menu, please refer to chapter 5.3

7.1 Exchange menu (“Exit”)

This menu is the exchange point between the default menu and the administration menus set. When the user reaches this screen from the default menu using the [ADMIN] item, he will be warned to proceed only after reading the manual of the receiver:

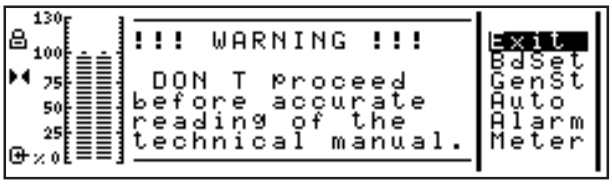

Figure 7-2

When one reaches this screen coming from an administration menu, there will be only the indication to push the button to go back to the default menu.

7.2 Board Set

This menu is related to the audio section settings of the receiver.

Figure 7-3

`Deemph` decides the kind of deemphasys to be applied to the audio signal (mono or left and right). The possible choices are 0, 25, 50 or 75 us.

`R/MPX` describes the R/MPX output

`L/Mono` describes the L/Mono output.

`St.Dec` this menu item, that is shown only if the stereo decoder is installed, allows to activate or deactivate it. When the stereo decoder is deactivated, the receiver behaves the same as if it was not fitted with the board.

7.3 General Setting

General setting menu.

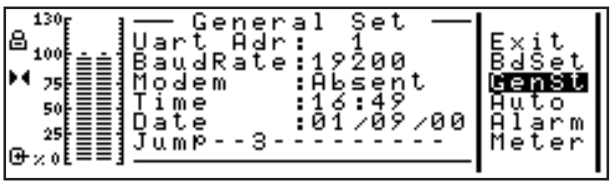

Figure 7-4

UART ADR
: address of the RX1-NV (serial port and IIC protocol), selectable between 1 and 200. If the receiver is in a stand-alone configuration, the address has to be set to 1

BAUD RATE
: tranfert rate of the RX1-LCD serial port

MODEM : configures the device to use a modem (Present) or the direct cable connection

JUMP : indicates the jumper setting of the receiver. If a number is shown, the respective jumper is closed, while the symbol "-" indicates that the jumper is open. The meaning of the jumper configurations is given in 9.2.

7.4 Auto

Receiver's automation setting.

In the standard configuration of the receiver this menu and the succeding Alarm are not activated. The following explanation is related to receivers with activated automatic alarms management (see chapter 9.2).

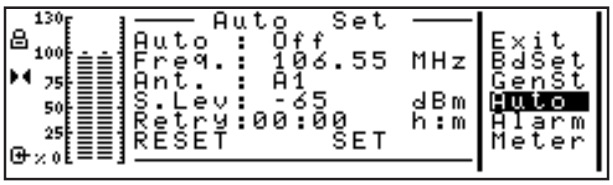

Figure 7-5

When the receiver is fitted with the tunable front-end option, one can configure the receiver so that it will switch to a backup configuration if an alarm condition is raised. The backup configuration includes a frequency value and an antenna input, that can differ or not from the normal setting.

Auto : select On to activate the automatic switching

Freq : Backup configuration frequency

Ant. : Backup configuration antenna input

S.Lev : Minimum level, in dBm, admitted for the backup configuration received signal. If Retry is set to 00:00, the receiver will switch back to the default setting when the signal level goes below this threshold.

Retry : Time interval (hours : minutes) to wait before the receiver switches from the backup setting to the default one. If set to 00:00, the receiver will switch back automatically if the backup received signal goes below S.Lev

RESET : forces the switching to the default setting

SET : forces the switching to the backup setting

7.5 Alarm

In its standard configuration, the receiver has this menu, the connected submenus and the former `Auto` are not activated. The following explanation is related to receivers with activated automatic alarms management (see chapter 9.2).

Using this menu, it's possible to set the way the alarm system of the receiver intervenes. For each submenu, this menu indicates if it's activated or not.

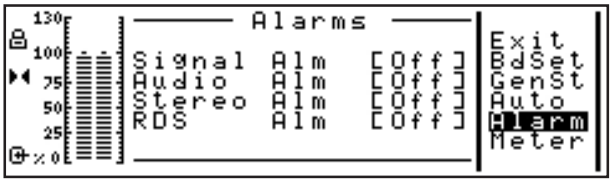

Figure 7-6

To get into one of the submenus, push the encoder when the cursor is on the desired item. Hereafter you will find the explanation of the submenus.

7.5.1 Signal Alarm

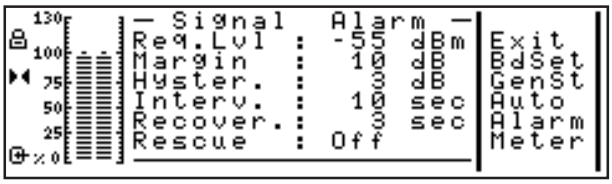

Figure 7-7

Setting of the alarm related to the received signal level for the standard working frequency. The alarm will be raised when the signal level remains below the level (`Req.Lev - Margin`) for `Interv` seconds. The alarm will be cancelled when the signal goes below the level (`Req.Lev - Margin + Hyster`) for `Recover` seconds.

`Req.Lev`
: setting of the level normally required for the received signal

`Margin`
: attenuation margin permitted for the received signal without the alarm being raised

`Hyster`
: Level histeresys to activate/deactivate the alarm. This setting permits to avoid instability situations when the received signal level fluctuates around the threshold level

`Interv`
: delay for the alarm to be reised (the level has to remain below the set level during the time defined by this variable before the situation being interpreted as alarm)

Recover
: delay for the alarm to be cancelled (the level has to remain above the set level during the time defined by this variable before the alarm situation being cancelled)

Rescue
: activates or deactivates the alarm. When the alarm is deactivated, the signal level that has been set will be used only by the audio exchange (or muting) function.

7.5.2 Audio Alarm

Audio level alarm setting. When this alarm is activated, the receiver will monitor the modulation level in the received signal, and an alarm situation will be signalled depending on the parameters set in this menu

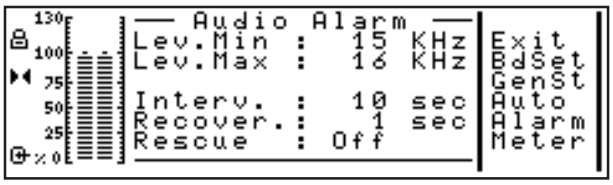

Figure 7-8

Lev.Min
: minimum modulation level in kHz under wich the audio alarm wil be raised

Lev.Min
: modulation level in kHz above wich the audio alarm will be cancelled

Interv
: delay for the alarm to be raised (the level has to remain below the set level during the time defined by this variable before the situation being interpreted as alarm)

Recover
: delay for the alarm to be cancelled (the level has to remain above the set level during the time defined by this variable before the alarm situation being cancelled)

Rescue
: activates or deactivates the alarm. When the alarm is deactivated, the receiver will not signal modulation level related alarms

7.5.3 Stereo Alarm

Stereo operation alarm setting. When this alarm is activated, the receiver will monitor the level of the pilot tone component in the demodulated signal, and an alarm situation will be signalled depending on the parameters set in this menu

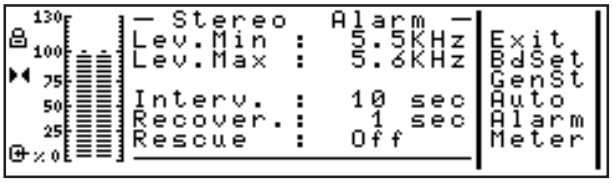

Figure 7-9

`Lev.Min`
: minimum modulation level in kHz due to the pilot tone under wich the stereo alarm wil be raised

`Lev.Max`
: modulation level in kHz due to the pilot tone above wich the stereo alarm will be cancelled

`Interv` delay for the alarm to be raised (the pilot tone level has to remain below the set level during the time defined by this variable before the situation being interpreted as alarm)

`Recover`
: delay for the alarm to be cancelled (the pilot tone level has to remain above the set level during the time defined by this variable before the alarm situation being cancelled)

`Rescue` activates or deactivates the alarm. When the alarm is deactivated, the receiver will not signal pilot tone level related alarms

7.5.4 RDS Alarm

Setting of the alarms related to the correctness of the received RDS data.

This submenu is not active if the RDS decoder board is not installed.

7.6 Meter

This menu is used to visualize the measurements of a series of parameters related to the received signal.

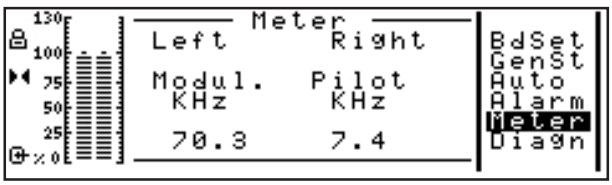

Figure 7-10

When the software is visualizing this menu, the VU meters in the left part of the display show the items that are selected in the menu (when the software is in any othe menu, the VU-meters always show the modulation level). Note that when the software is in this menu, the audio and stereo alarms are momentarily inactive.

7.7 Diagnostics

Using this menu, the user can read a few values that can be useful to check the good working of the piece of equipment.

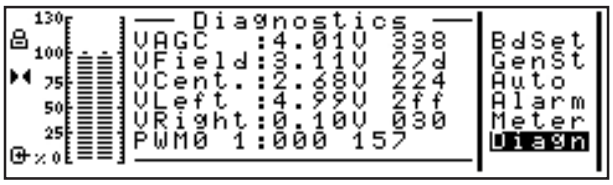

Figure 7-10

The reported values are the analog and digital representations of some internal voltages.

7.8 Power Supply

This menu displays the measurements of the different internal power supply voltages

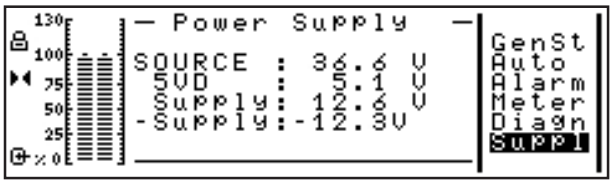

Figure 7-10

7.9 Stereo Set

Stereo decoder board setting menu. This menu will be present only if the stereo decoder option is provided.

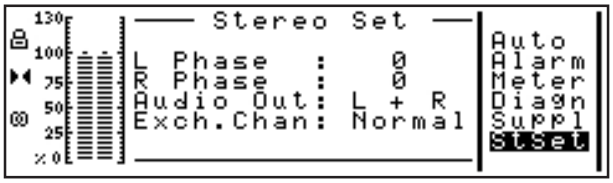

Figure 7-10

`L Phase`

Left channel phase setting, normal (0) or inverted (180).

`R Phase`

Right channel phase setting, normal (0) or inverted (180).

`Audio Out`

setting of the stereo decoder output. The possible choices are `L & R` or `(L+R)/2`. In the first case, the decoder output will give the decoded signal, while in the second case on both channel there is the mono signal reconstructed by the decoder

`Exch.Chan`

this menu item permits to exchange the left and the right channels (`Excha.`) or to leave them unchanged (`Normal`)

8. Technical Specifications

8.1 Physical specifications

Panel Size	483 mm (19”) x 88 mm (3 1/2”) (2 HE)
Depth	377 mm
Peso	10.7 Kg
Temperature range	-10 °C ÷ 50 °C

8.2 Electrical Specifications

RF Section

Frequency range	87.5 MHz ÷ 108 MHz
Channel spacing	10 kHz
Tuning	Sinthesized PLL
Frequency stability	±1ppm from -10°C to 50°C
RF input connector	"N" type (optional 2nd “N” type connector)
RF input impedance	50 Ohm
Frequency setting	direct, software based
RF maximum input level	+23 dBm
Muting level	software selectable, 0 dBm to -100 dBm
IF	10.7 MHz, 700 kHz
Image frequency rejection	> 80 dB

MPX Operation

Output connectors (type, impedance, level)	1 BNC, 50 Ω, 18 dBu (in parallel with XLR) 1 XLR, 50 Ω, 24 dBu 1 BNC, 50 Ω, 0 dBu on 50 Ω, 6 dBu on 600Ω, buffered output capable to drive a 50 Ω load with 250 mt. cable
S/N (L and R channels, external measuring stereo decoder)	72 dB, RMS, filter 20 Hz - 20 kHz, deenph. 50 µs 61 dB, QuPk, filter CCIR weighted, deenph. 50 µs
Amplitude/frequency response	± 0.07 dB (40 Hz ÷ 60 kHz) ± 0.5 dB (60 kHz ÷ 75 kHz)
Stereo separation (with external measuring stereo decoder)	> 55 dB (40 Hz ÷ 15 kHz)
Total harmonic distortion	< 0.1 %

Stereo operation (with optional stereo decoder)

Output connectors (type, impedance, level)	2 XLR, 50 Ω, 24 dBu
Sensitivity	< 200 µV for 54 dB S/N QuPk weighted CCIR filter, deenph. 50 µs
Dynamic selectivity at ± 300 kHz	35 dB
S/N	70 dB, RMS, filter 20 Hz - 20 kHz, deenph. 50 µs 60 dB, QuPk, filter CCIR weighted, deenph. 50 µs
Amplitude/frequency response	± 0.25 dB (40 Hz ÷ 15 kHz)

Stereo Separation	> 50 dB (40 Hz ÷ 15 kHz)
Deemphasys	0, 25 µs, 50 µs, 75 µs
Total harmonic distortion	< 0.25 %

Mono operation

Output connector (type, impedance, level)	XLR, 50 Ω, 24 dBu
Sensitivity	< 12 µV for 54 dB S/N QuPk filter CCIR weighted deenph. 50 µs
Dynamic selectivity at ± 300 kHz	33 dB
S/N	74 dB, RMS, filter 20 Hz - 20 kHz, deemph. 50 µs 61 dB, QuPk, filtro CCIR weighted, deemph. 50 µs
Amplitude/frequency response	± 0.25 dB (40 Hz ÷ 15 kHz)
Deempasys	0, 25 µs, 50 µs, 75 µs
Total harmonic distortion	< 0.1 %

General characteristics

Power supply	170 V ÷ 250 V 90 V ÷ 135 V
Power consumption	< 50 VA

Interfaces

Serial	DB9, RS 232 DCE/DTE selectable optional RS 485 with external convertion
Telemetry	DB25

Options

/05	Internal stereo decoder
/06	Internal RDS decoder
/07	Tunable RF front-end

9. Internal Description

9.1 Modules Identification

Figure 9.1 represents the upper view of the receiver. In the following the different modules are enumerated.

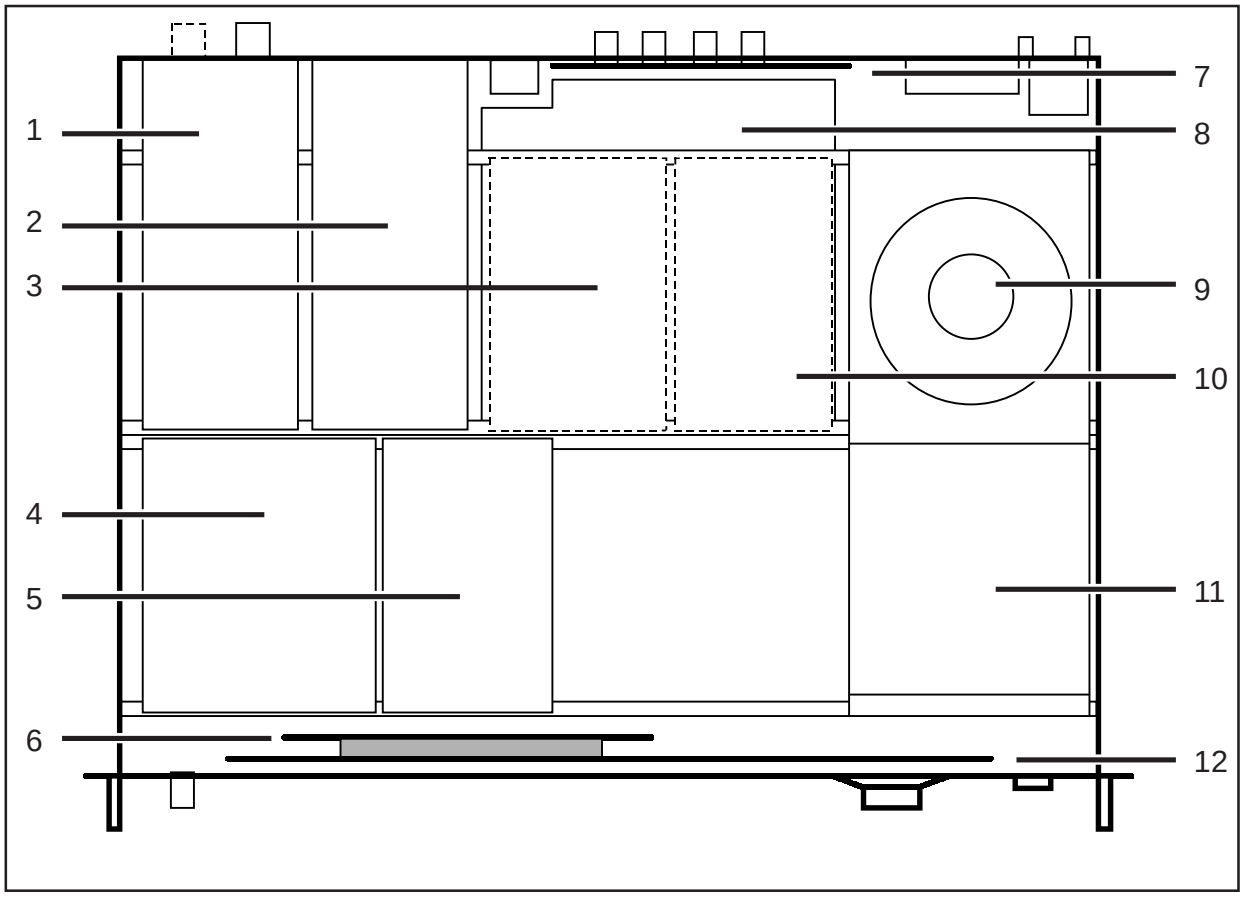

Figure 9-1

[1] RF front-end
[2] IF section 700 kHz
[3] Stereo decoder board (option)
[4] PLL/VCO section (the VCO box is on the lower side)
[5] Discriminator
[6] CPU board
[7] Audio output board
[8] Audio board (the component side is on the lower side)
[9] Transformer
[10] RDS decoder board (option)
[11] Power supply (on the lower side)
[12] Panel board

9.2 Configuration

The RX1-NV can have different options and configurations. The device's management software configures itself to correctly control the receiver on the basis of the presence or absence of some jumpers on the panel board:

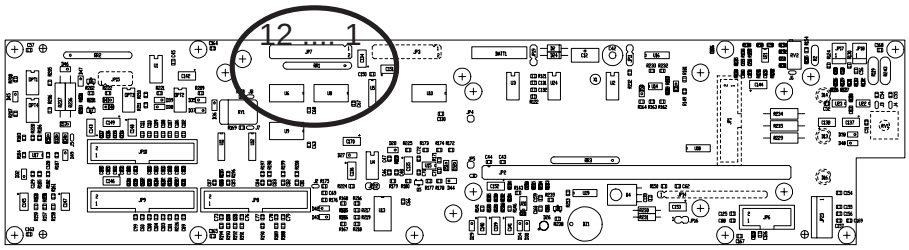

The configuration of the receiver is fixed by JP7 jumpers:

[1,2] Reserved

[3] Stereo decoder presence

[4] RDS board present

[5] Automatic alarms management

[6] Tunable RF front-end presence

[7] Digital visualisation (i.e. non analog) of the received signal level and muting level in the default menu

[8 ... 12] Reserved

Please don't enable the management of options your receiver is not fit with, since this could cause mfunctions (jumpers 3, 4 and 6).

The automatic alarms management (jumper 5 closed) is particularily useful when the alarms board option is present, nevertheless it can be used without it.

The digital visualisation (jumper 7 closed) can be selected, if you want, independendtly from the options the receiver comprises.

9.3 Frequency setting for tuned front-end

The operation described in this chapter is necessary when one wants to change the working frequency of a receiver having the tuned version of the RF front-end.

This operation has to be performed by skilled personnel using suitable instrumentation; the suggested instruments are the following:

a) Spectrum analyser with signal generator (Tracking)

b) Precision stereo audio signal generator/analyser

c) Radio signal generator with low distortion and external modulation input

d) Isolated screwdriver to drive smd capacitance coils

e) A 50 W coaxial cable terminated with a "N" connector and a "SMB" connector, to be used to connect the receiver's preamplifier output to the spectrum analyser.

f) A 50 W coaxial cable terminated with a couple of "N" connectors, to link the output of the RF signal generator with the inpu of the receiver.

g) A 50 W coaxial cable terminated with a "BNC" connector on one side, and a connector suitable for the signal input of the audio analyser on the other side.

h) Coaxial cables adapted for the signal connection between RF signal generator and the audio signal generator/analyser.

The tuning procedure for the front-end is the following:

- Unscrew and remove both the receiver's covers
- Identify the RF fron-end with the help of figure 9-1

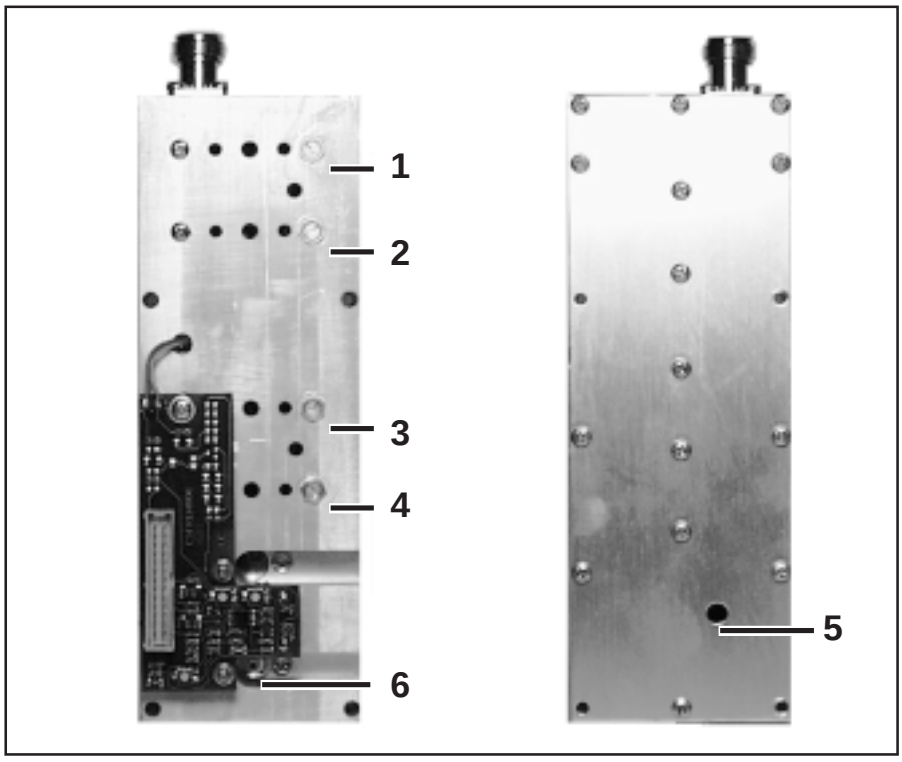

Figure 9-3

- Identify the five variable capacitances that will be used (Figure 9-3): the regulators 1,2,3 and 4 are on the bottom side of the receiver and have a screw-like look; the regulator 5 is a SMD capacitance trimmer mounted on the internal PCB and it is possible to operate on it with the proper screwdriver, without opening the box, through a hole.
- Set the spectrum analyser center frequency to the receiver's new working frequency, and the span shall be at least +/-10MHz.
- Set the tracking signal generator of the spectrum analyser to have a RF output power between -50dBm and -60dBm
- • Connect the signal generator to the receiver's antenna connector.
- In the receiver, disconnect the link between the RF front-end and the IF circuit. Use the SMB connector of the front-end that is now free (6, Figure 9-3) to connect it to the spectrum analyser. Switch on the receiver.

- Adjust all the trimmers so that the amplified signal reaches its maximum at the desired frequency: you should operate on the trimmer controlling the result on the spectrum analyzer. Trimmers 1-4 reduce the tuned frequency when turned clockwise, while trimmer 5 shall be turned left or right depending on the case. At the end of this operation, the signal gain should be between 28dB and 32dB.
- Narrow the frequency span of the spectrum analyser down to +/- 500 kHz.
- Fine-adjust the trimmers again, trying to obtain the best simmetry in the frequency response, while keeping the gain at its maximum value. The response shall be sensibly flat (< 1dB) in a +/- 200 kHz range around the tuning frequency.
- Reestablish the link between the input circuit and the IF circuit.
- The RF front-end at this point can be considered tuned. Before putting in place the receiver's covers, if you have the necessary instruments, you can measure the stereo separation and the distortion of the receiver. If they differ from the values described in the factory tests, very fine adjustments of the capacitance trimmers will improve them. Note that the regulations of this step have to be really fine, to avoid impacting the selectivity of the receiver maximized before at the spectrum analyzer.

Appendice A

Piani di montaggio, schemi elettrici, liste componenti / *Component layouts, schematics, bills of material*

Questa parte del manuale contiene i dettagli tecnici riguardanti la costruzione delle singole schede componenti il RX1-NV LCD. L'appendice è composta dalle seguenti sezioni:

This part of the manual contains the technical details about the different boards of the RX1-NV LCD. This appendix is composed of the following sections:

Description	RVR Code	Vers.	Pages
Schemi a blocchi		1.1	2
Decoder RDS	CSRXRDSPIL02	1.1	8
Sheda Audio	CSAUDRXLCD01	1.2	6
Decoder Stereo	CSDECRXLCD01	1.1	8
Filtro 19Khz	CSFIL19K01	1.2	4
Ingresso Audio	AUDCNRTX01	1.1	4
Alimentatore	PSSRLNEW	1.1	4
Demodulatore FM	SLFMD0001RXH	1.3	4
Interfaccia Relè	CSINTRXLCD01	1.2	4
Buffer IF	CS107MONLCD	1.1	4
Doppia Conversione IF	CSIF0E7	1.2	4
PLL	CSPLLRTX01	1.2	4
VCO	SLVCORTXLCD01	1.2	4
Scheda Pannello	SLSTLPANS001	1.3	6
Scheda CPU	SLPTCPU55202	1.1	4
Front-End RF		1.1	10
	CSFRENDDC	1.1	
	FOUT100M	1.1	
	FLNA100M	1.1	
Front-End RF a Varicap	CSFRVARLCD01	1.1	4

Pagina lasciata intenzionalmente in bianco
This page intentionally left blank

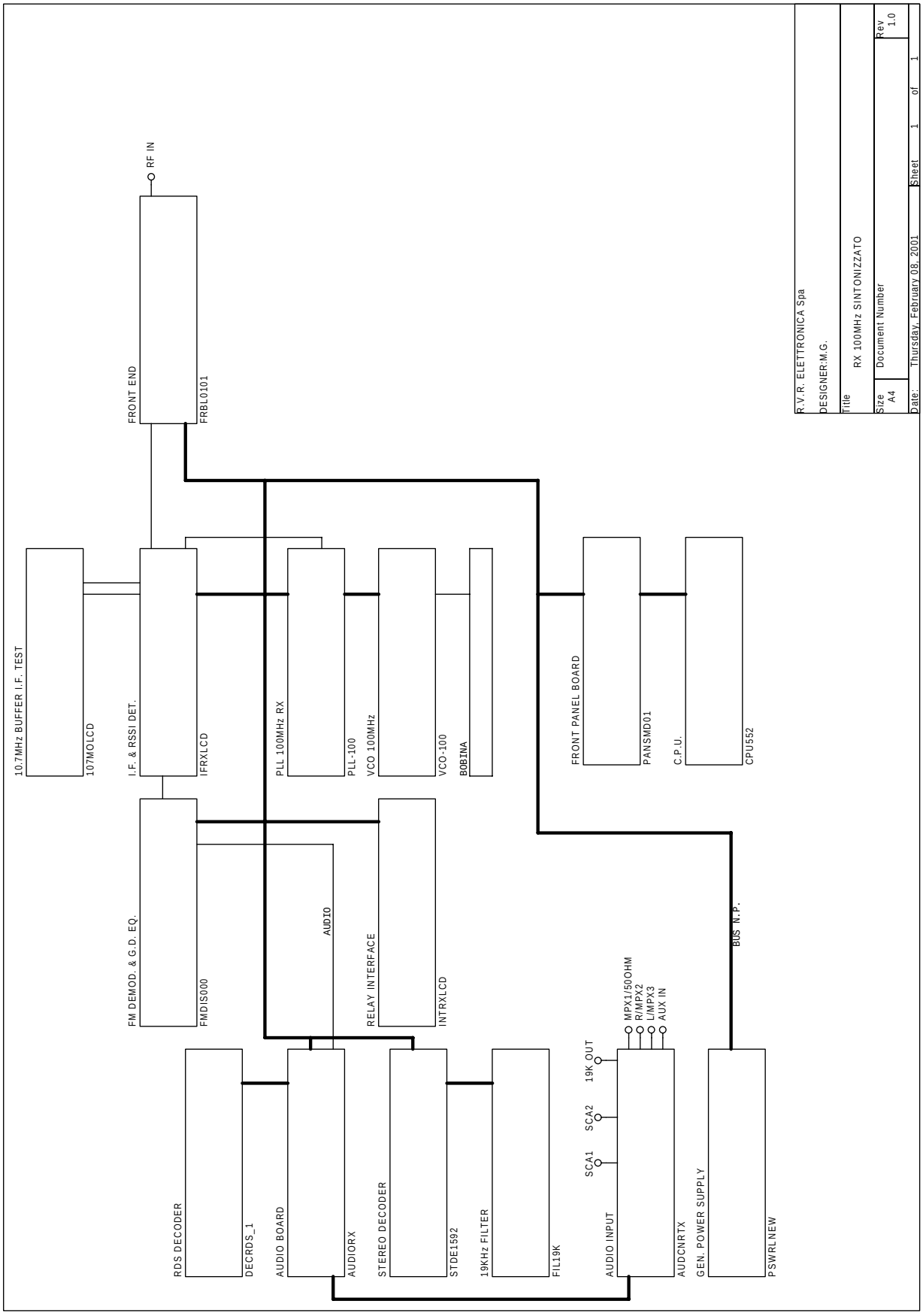
RF IN
FRONT END
FRBL0101
10.7MHz BUFFER I.F. TEST
107MOLCD
I.F. & RSSI DET.
IFRXLCD
PLL 100MHz RX
PLL-100
VCO 100MHz
VCO-100
BOBINA
FRONT PANEL BOARD
PANSMD01
C.P.U.
CPU552
FM DEMOD. & G.D. EQ.
FMDIS000
AUDIO
RELAY INTERFACE
INTRXLCD
BUS N.P.
MPX1/50OHM
R/MPX2
L/MPX3
AUX IN
19K OUT
SCA2
SCA1
RDS DECODER
DECRDS_1
AUDIO BOARD
AUDIORX
STEREO DECODER
STDE1592
19KHz FILTER
FIL19K
AUDIO INPUT
AUDCNRTX
GEN. POWER SUPPLY
PSWRLNEW
R.V.R. ELETTRONICA Spa
DESIGNER:M.G.
Title
RX 100MHz SINTONIZZATO
Size
A4
Document Number
Rev
1.0
Date:
Thursday, February 08, 2001
Sheet
1
of
1

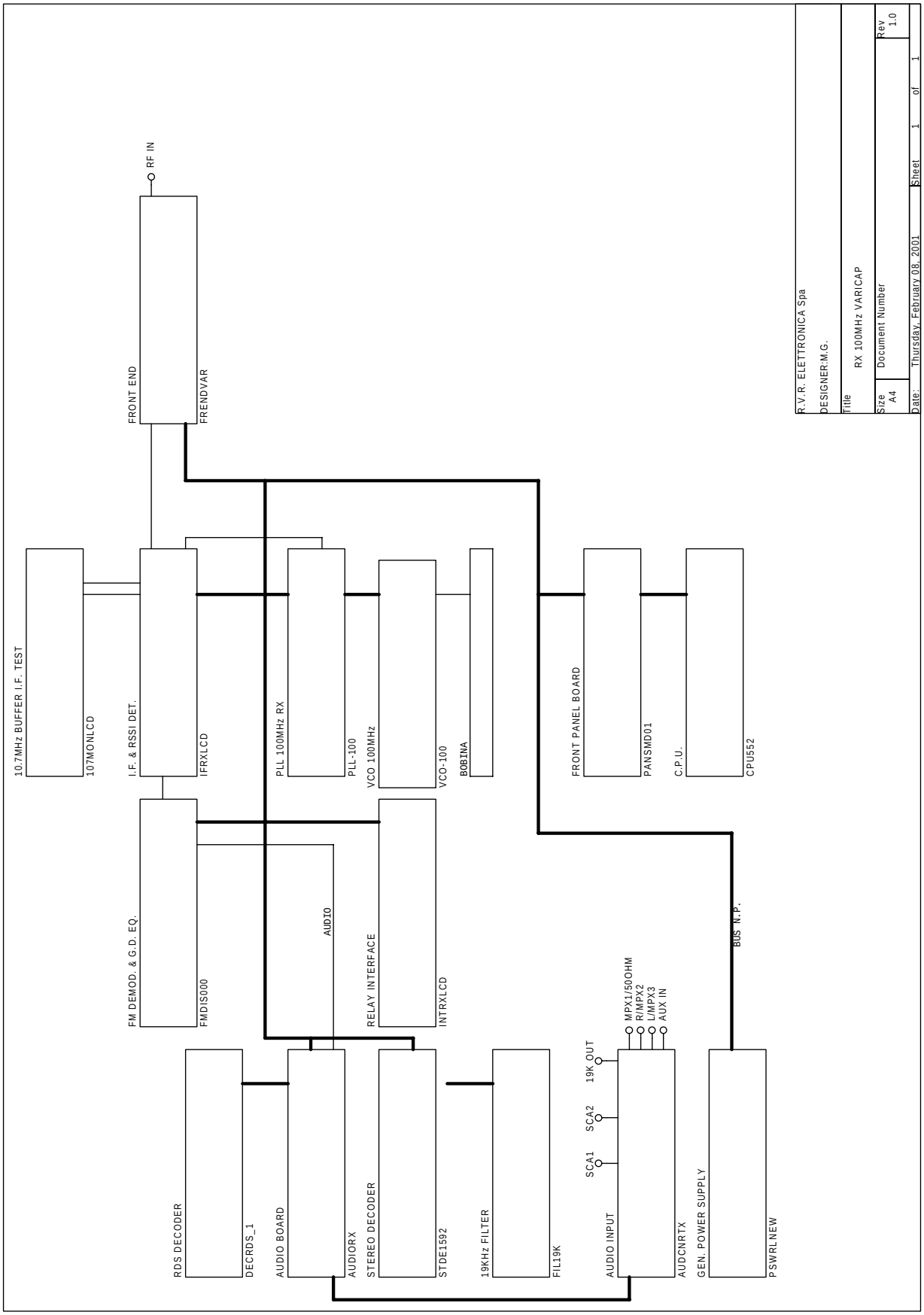
RF IN
FRONT END
FRENDVAR
10.7MHz BUFFER I.F. TEST
107MONLCD
I.F. & RSSI DET.
IFRXLCD
PLL 100MHz RX
PLL-100
VCO 100MHz
VCO-100
BOBINA
FRONT PANEL BOARD
PANSMD01
C.P.U.
CPU552
FM DEMOD. & G.D. EQ.
FMDIS000
AUDIO
RELAY INTERFACE
INTRXLCD
BUS N.P.
MPX1/50OHM
R/MPX2
L/MPX3
AUX IN
19K OUT
SCA2
SCA1
RDS DECODER
DECRDS_1
AUDIO BOARD
AUDIORX
STEREO DECODER
STDE1592
19KHz FILTER
FIL19K
AUDIO INPUT
AUDCNRTX
GEN. POWER SUPPLY
PSWRLNEW
R.V.R. ELETTRONICA Spa
DESIGNER:M.G.
Title
RX 100MHz VARICAP
Size
A4
Document Number
Rev
1.0
Date:
Thursday, February 08, 2001
Sheet
1
of
1

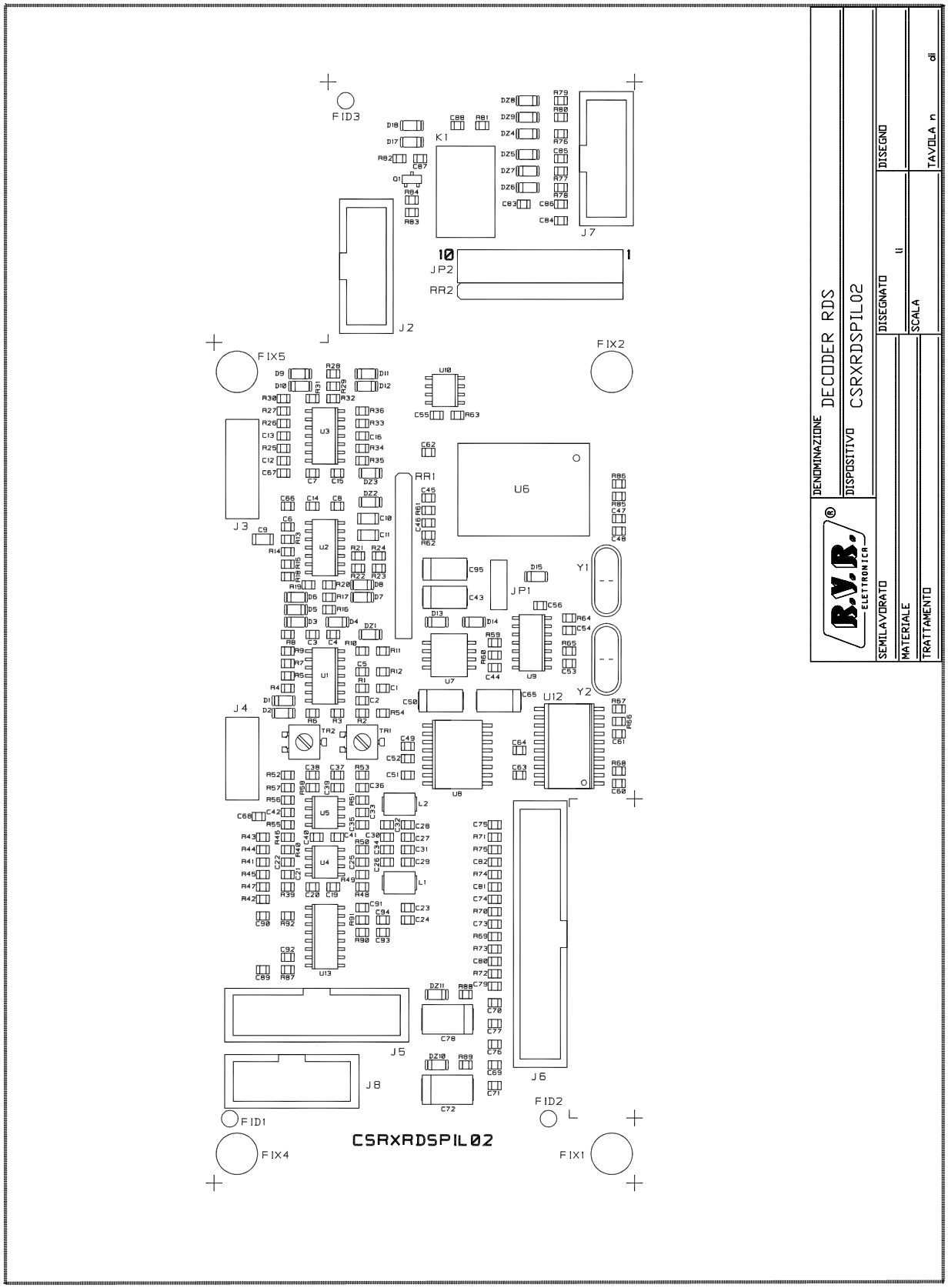
DENOMINAZIONE DECODER RDS
DISPOSITIVO CSRXRDSPIL02
DISEGNATO
DISEGNO
SCALA
TAVOLA n
di
SEMILAVORATO
MATERIALE
TRATTAMENTO
CSRXRDSPIL02

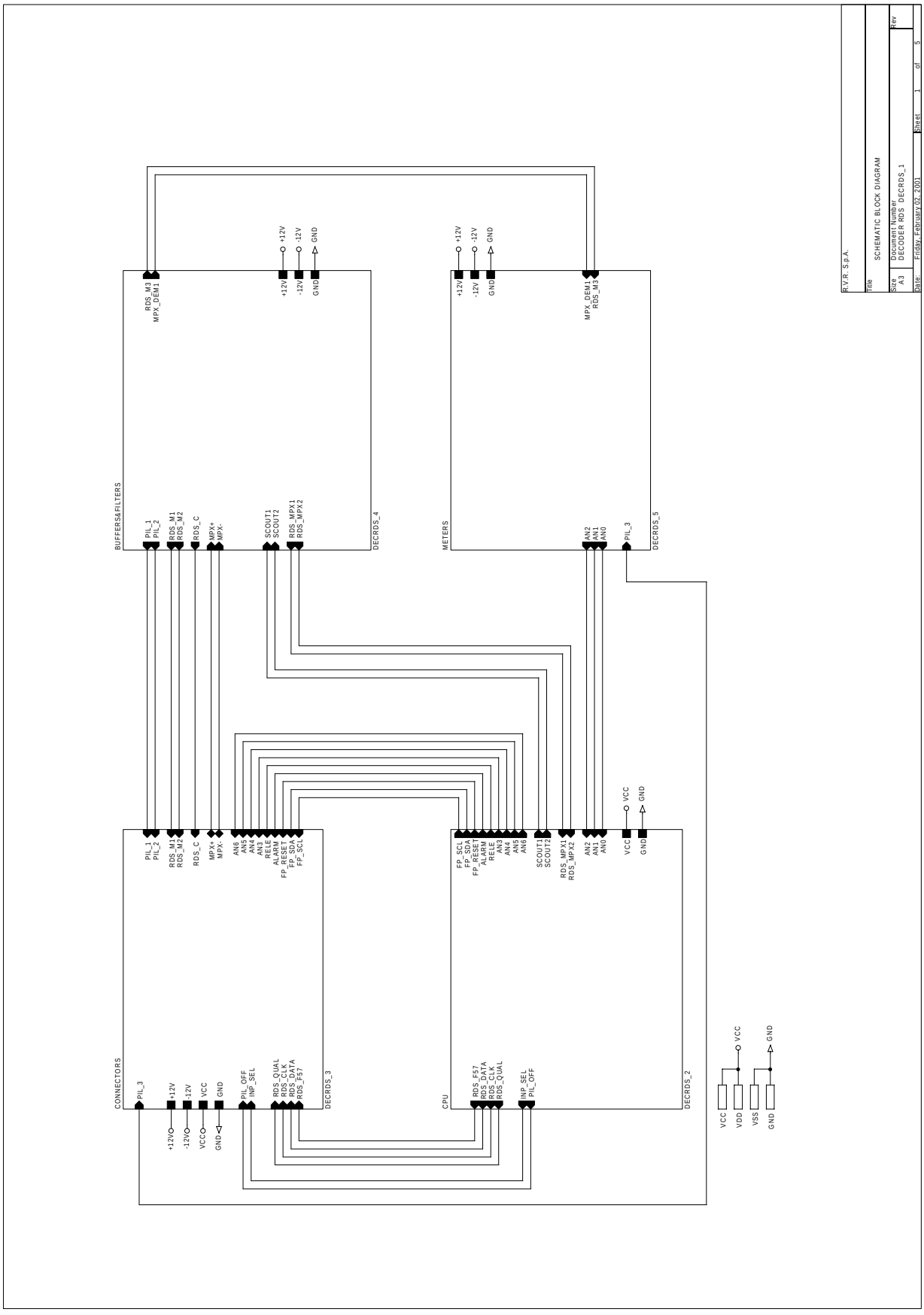
R.V.R. S.p.A.
Title
SCHEMATIC BLOCK DIAGRAM
Size
A3
Document Number
DECODER RDS_DECRDS_1
Rev
Date:
Friday, February 02, 2001
Sheet
1
of
5
BUFFERS&FILTERS
DECRDS_4
METERS
DECRDS_5
CONNECTORS
DECRDS_3
CPU
DECRDS_2
+12V
-12V
GND
VCC
VDD
VSS

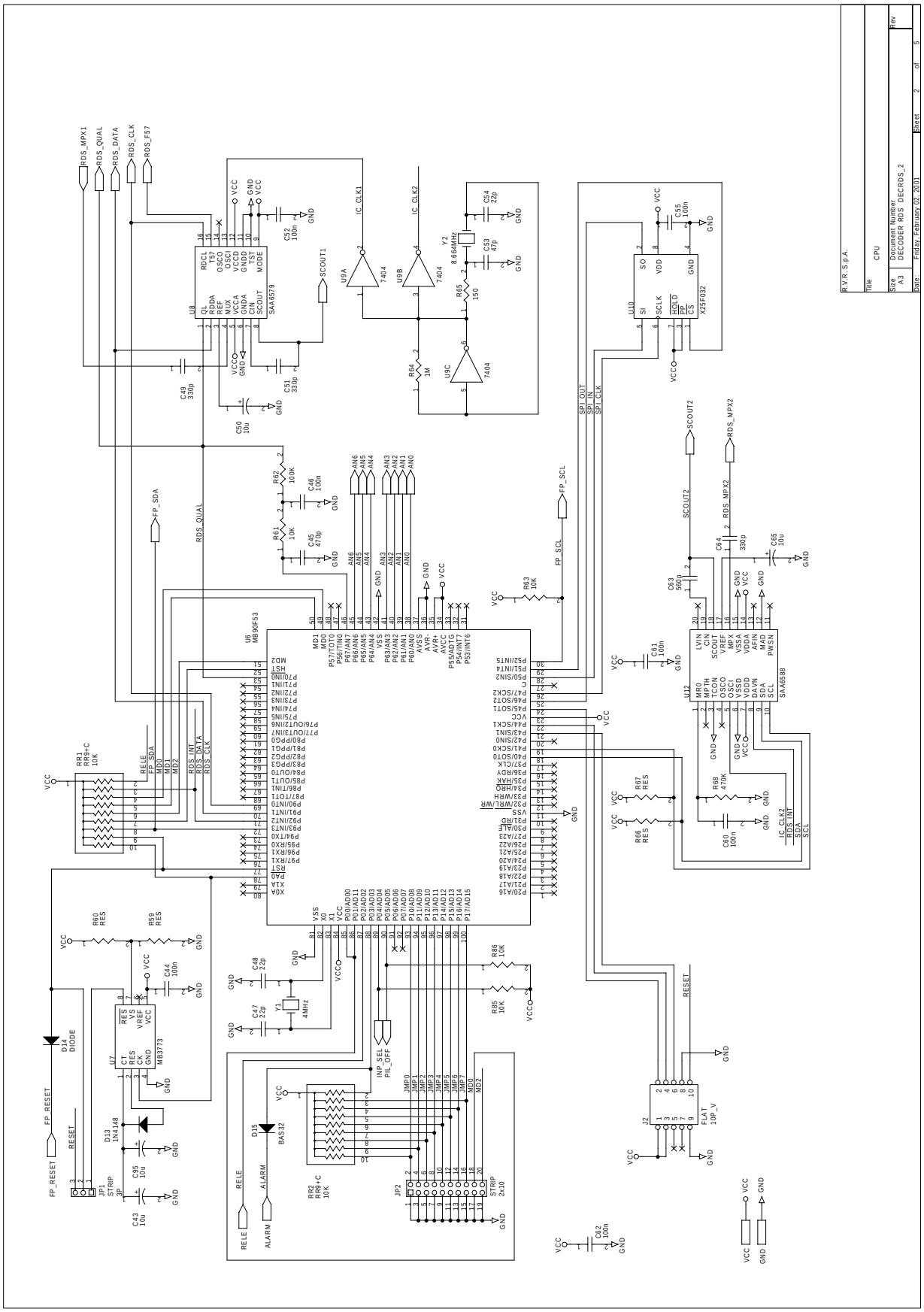
R.V.R. S.p.A.
Title
CPU
Size
A3
Document Number
DECODER RDS DECRDS_2
Rev
Date: Friday, February 02, 2001
Sheet 2 of 5
U8
SAA6579
U9A
7404
U9B
7404
U9C
7404
U10
X25F032
U6
MB90F53
U12
SAA6588
U7
MB3773
U13
1N4148
D14
DIODE
D15
BAS32
J1
STRIP
3P
J2
FLAT
10P_V
JP2
STRIP
2x10
RR1
RR9+C
10K
RR2
RR9+C
10K
Y1
4MHz
Y2
8.664MHz
RDS_MPX1
RDS_QUAL
RDS_DATA
RDS_CLK
RDS_F57
SCOUT1
SCOUT2
RDS_MPX2
FP_SDA
FP_SCL
FP_RESET
RESET
RELE
ALARM
INP_SEL
PIL_OFF
IC_CLK1
IC_CLK2
SPI_OUT
SPI_IN
SPI_CLK
VCC
GND

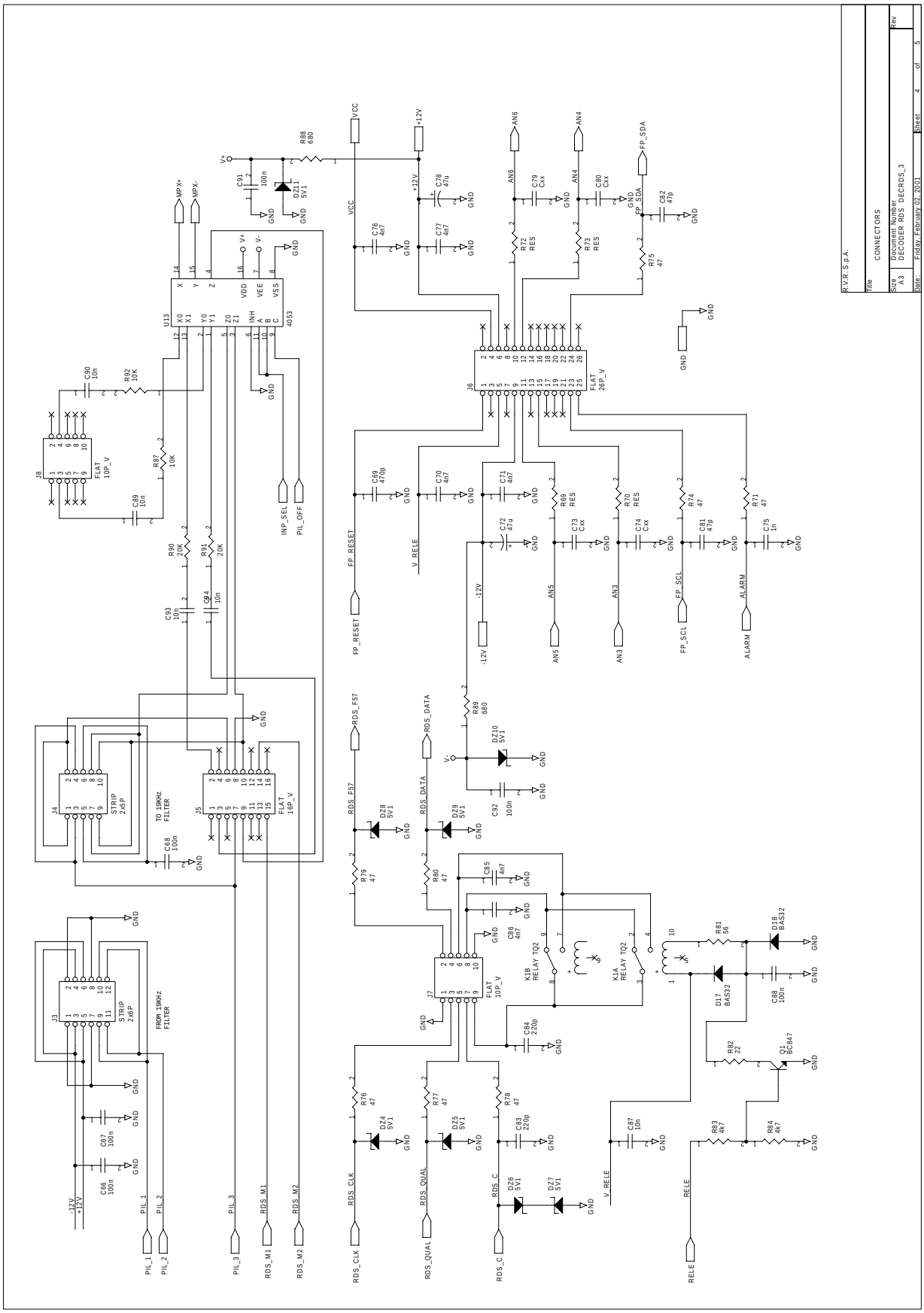
R.V.R. S.p.A.
Title
CONNECTORS
Size: A3
Document Number
DECODER RDS DECRDS_3
Rev
Date: Friday, February 02, 2001
Sheet 4 of 5
VCC
+12V
-12V
GND
FP_RESET
V_RELE
FP_SCL
FP_SDA
ALARM
AN6
AN5
AN4
AN3
MPX+
MPX-
INP_SEL
PIL_OFF
RDS_F57
RDS_DATA
RDS_CLK
RDS_QUAL
RDS_C
RELE
PIL_1
PIL_2
PIL_3
RDS_M1
RDS_M2
U13
4053
J6
FLAT 26P_V
J7
FLAT 10P_V
J8
FLAT 10P_V
J3
STRIP 2x6P
J4
STRIP 2x5P
J5
FLAT 16P_V
TO 19KHz FILTER
FROM 19KHz FILTER
K1A RELAY TQ2
K1B RELAY TQ2
Q1 BC847

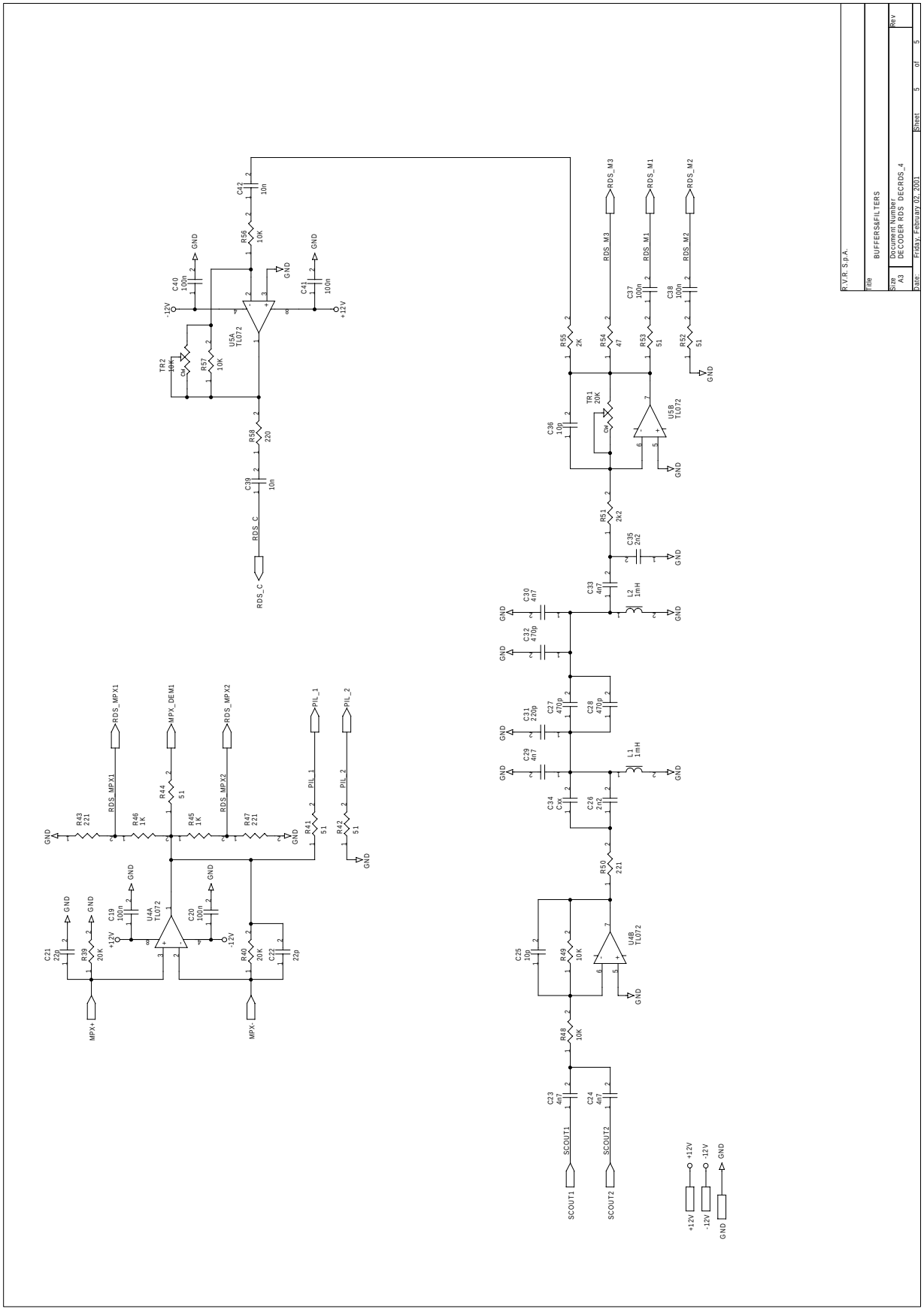
R.V.R. S.p.A.
Title BUFFERS&FILTERS
Size A3
Document Number DECODER RDS DECRDS_4
Rev
Date Friday, February 02, 2001
Sheet 5 of 5
RDS_C
RDS_MPX1
MPX_DEM1
RDS_MPX2
PIL_1
PIL_2
MPX+
MPX-
SCOUT1
SCOUT2
RDS_M3
RDS_M1
RDS_M2
+12V
-12V
GND

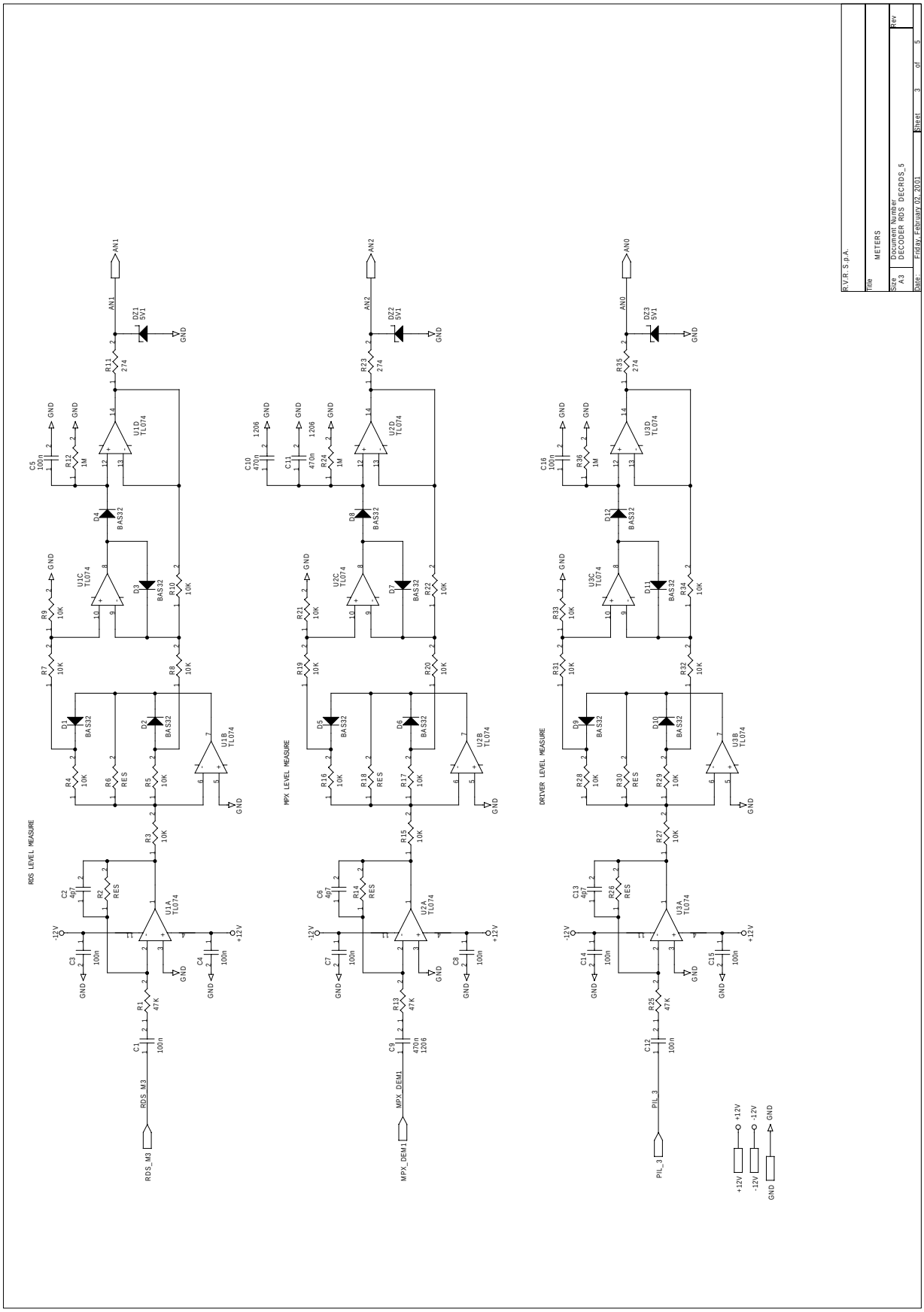
R.V.R. S.p.A.
Title METERS
Size A3
Document Number DECODER RDS DECRDS_5
Rev
Date: Friday, February 02, 2001
Sheet 3 of 5
RDS LEVEL MEASURE
MPX LEVEL MEASURE
DRIVER LEVEL MEASURE
AN1
AN2
AN0
RDS_M3
MPX_DEM1
PIL_3
+12V
-12V
GND

RX1/RXRL-NV R.D.S. DECODER Bill Of Materials Page 1

Item	Quant.	Reference	Part	Description	Code
1	30	C1,C3,C4,C5,C7, C8,C12,C14,C15, C16,C19,C20,C37, C38,C40,C41,C44, C46,C52,C55,C56, C60,C61,C62,C66, C67,C68,C88,C91, C92	.1u	COND. CHIP 0805	
2	3	C2,C6,C13	4p7	COND. CHIP 0805	
3	3	C9,C10,C11	.47u	COND. CHIP 1206	
4	5	C21,C22,C47,C48, C54	22p	COND. CHIP 0805	
5	15	C23,C24,C29,C30, C33,C70,C71,C73, C74,C76,C77,C79, C80,C85,C86	4n7	COND. CHIP 0805	
6	2	C25,C36	10p	COND. CHIP 0805	
7	2	C26,C35	2n2	COND. CHIP 0805	
8	5	C27,C28,C32,C45, C69	470p	COND. CHIP 0805	
9	3	C31,C83,C84	220p	COND. CHIP 0805	
10	8	R2,R14,R26,C34, R59,R60,R66,R67	*		
11	7	C39,C42,C87,C89, C90,C93,C94	10n	COND. CHIP 0805	
12	4	C43,C50,C65,C95	10u	COND. EL. SMD16V	
13	3	C49,C51,C64	330p	COND. CHIP 0805	
14	3	C53,C81,C82	47p	COND. CHIP 0805	
15	1	C63	560p	COND. CHIP 0805	
16	2	C72,C78	47u	COND. EL. SMD16V	
17	1	C75	1n0	COND. CHIP 0805	
18	11	DZ1,DZ2,DZ3,DZ4, DZ5,DZ6,DZ7,DZ8, DZ9,DZ10,DZ11	DZ5V1	DIODO ZENER SMD 5V1	
19	17	D1,D2,D3,D4,D5, D6,D7,D8,D9,D10, D11,D12,D13,D14, D15,D17,D18	4148S	DIODO SIL. MINIMELF	
20	4	FIX1,FIX2,FIX4, FIX5	FIX35		
21	1	JP1	JP3	STRIP M 2.54 3PIN	
22	1	JP2	CN20PDF	STRIP F 2X2.54 20 PIN	
23	3	J2,J7,J8	CN10PD	CONN. M 2X2.54 10PIN	
24	1	J3	CN12PDF	STRIP F 2X2.54 12 PIN	
25	1	J4	CN10PDF	STRIP F 2X2.54 10 PIN	
26	1	J5	CN16PD	CONN. M 2X2.54 16PIN	

27	1	J6	CN26PD	CONN. M 2X2.54 26PIN
28	1	K1	RLYTQ212V	RELE' TQ2 12V
29	2	L2,L1	1mH	IMPEDENZA SMD 1812
30	1	Q1	BC847	TRANSISTOR SOT23
31	2	RR1,RR2	RR9+C 10K	RES. SMD 0805 5%
32	3	R1,R13,R25	47K	RES. SMD 0805 5%
33	31	R3,R4,R5,R7,R8, R9,R10,R15,R16, R17,R19,R20,R21, R22,R27,R28,R29, R31,R32,R33,R34, R48,R49,R56,R57, R61,R63,R85,R86, R87,R92	10K	RES. SMD 0805 5%
34	7	R6,R12,R18,R24, R30,R36,R64	1M0	RES. SMD 0805 5%
35	3	R11,R23,R35	270	RES. SMD 0805 5%
36	4	R39,R40,R90,R91	20K0	RES. SMD 0805 1%
37	7	R41,R42,R44,R52, R53,R54,R81	51H	RES. SMD 0805 5%
38	4	R43,R47,R50,R58	220	RES. SMD 0805 5%
39	2	R46,R45	1K0	RES. SMD 0805 5%
40	2	R51,R55	2K2	RES. SMD 0805 5%
41	1	R62	100K	RES. SMD 0805 5%
42	1	R65	150	RES. SMD 0805 5%
43	1	R68	470K	RES. SMD 0805 5%
44	6	R69,R70,R72,R73, R83,R84	4K7	RES. SMD 0805 5%
45	8	R71,R74,R75,R76, R77,R78,R79,R80	47H	RES. SMD 0805 5%
46	1	R82	22H	RES. SMD 0805 5%
47	2	R88,R89	680	RES. SMD 0805 5%
48	1	TR1	20KTRIM4	TRIM.4X4mm SMD 20K
49	1	TR2	10KTRIM4	TRIM.4X4mm SMD 10K
50	3	U1,U2,U3	TL074S	CI LIN. TL074SMD
51	2	U4,U5	TL072S	CI LIN. TL072SMD
52	1	U6	MB90F53	CI DIG. MB90F53
53	1	U7	MB3773S	CI DIG. MB3773SMD
54	1	U8	SAA6579S	CI DIG. SAA6579SMD
55	1	U9	74HC04S	CI DIG. 74HC04SMD
56	1	U10	X25F032	CI DIG. X25F032SMD
57	1	U12	SAA6588S	CI DIG. SAA6588SMD
58	1	U13	4053S	CI DIG. 4053SMD
59	1	Y1	Q4M00	QUARZO 4.00MHz HC18
60	1	Y2	Q8M664	QUARZO 8.664MHz HC18

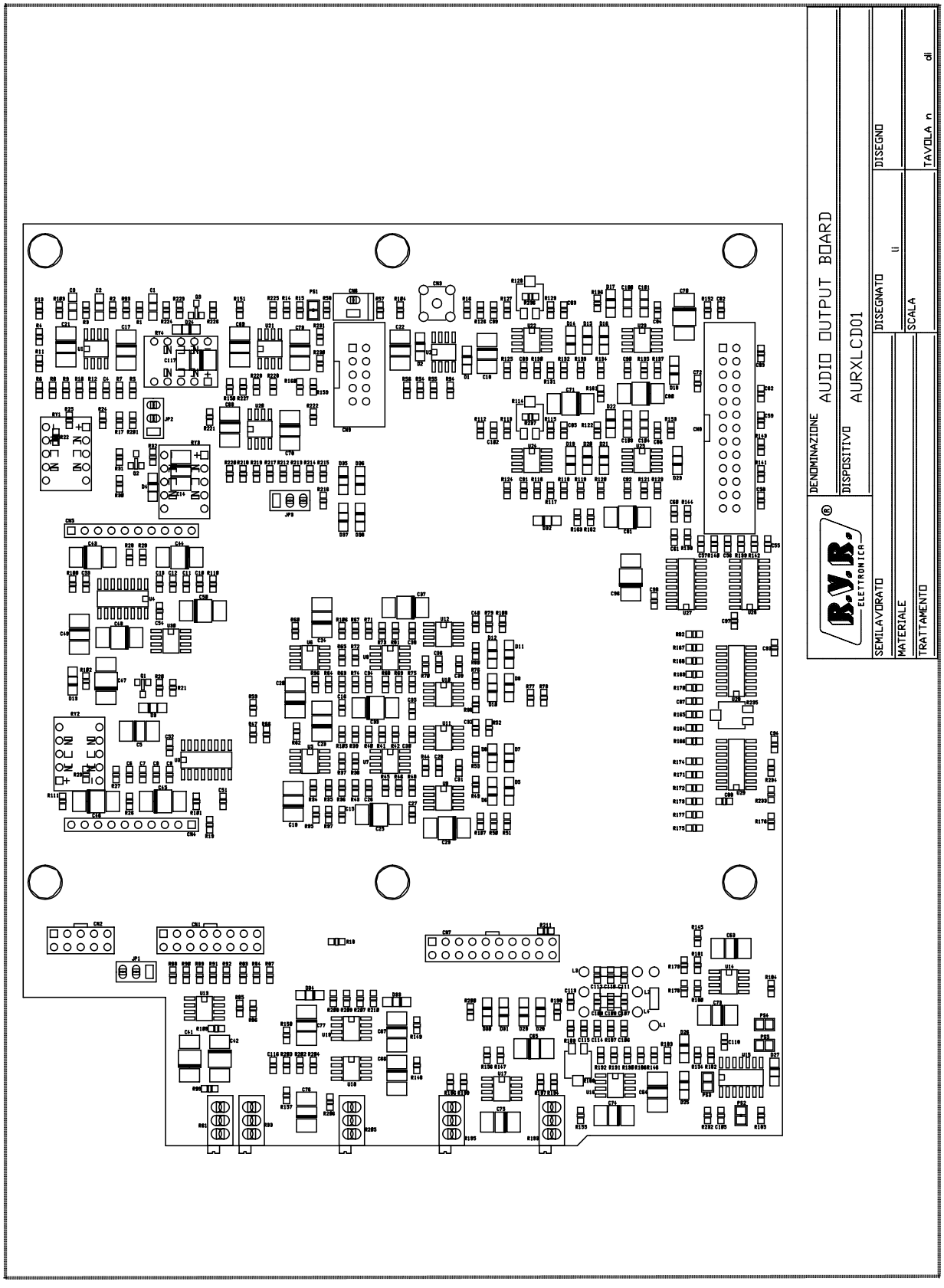
DENOMINAZIONE AUDIO OUTPUT BOARD
DISPOSITIVO AURXLCD01
DISEGNATO
DISEGNO
SCALA
TAVOLA n
di
SEMILAVORATO
MATERIALE
TRATTAMENTO
B.V.R. ELETTRONICA

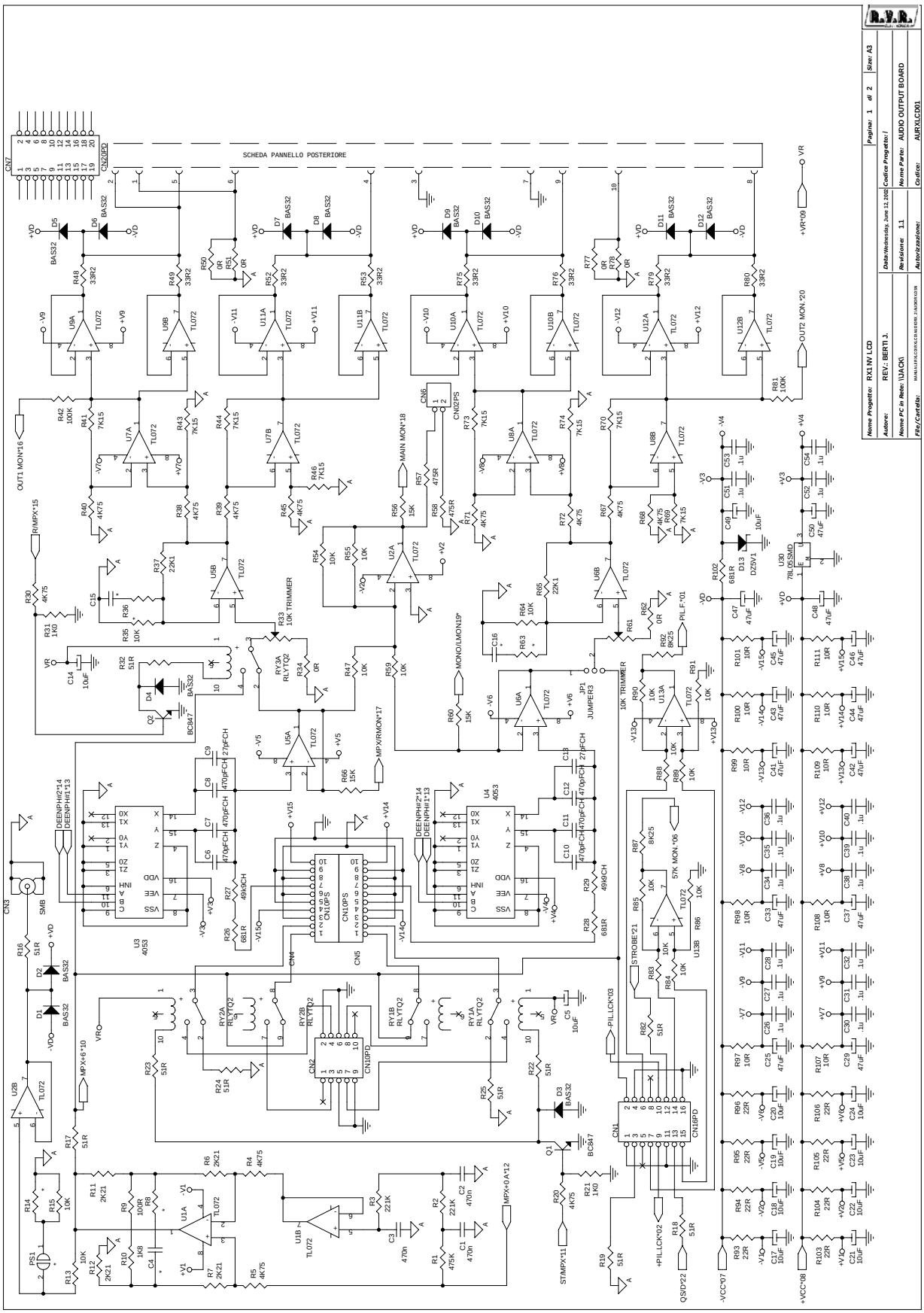
SCHEDA PANNELLO POSTERIORE
Nome Progetto: RX1 NV LCD
Autore: REV : BERTI J.
Nome PC in Rete: \\ADCK\
File/Cartella:
Data:Wednesday, June 12, 2002
Revisione: 1.1
Autorizzazione:
Pagina: 1 di 2
Codice Progetto: /
Nome Parte: AUDIO OUTPUT BOARD
Codice: AURXLCD01
Size: A3

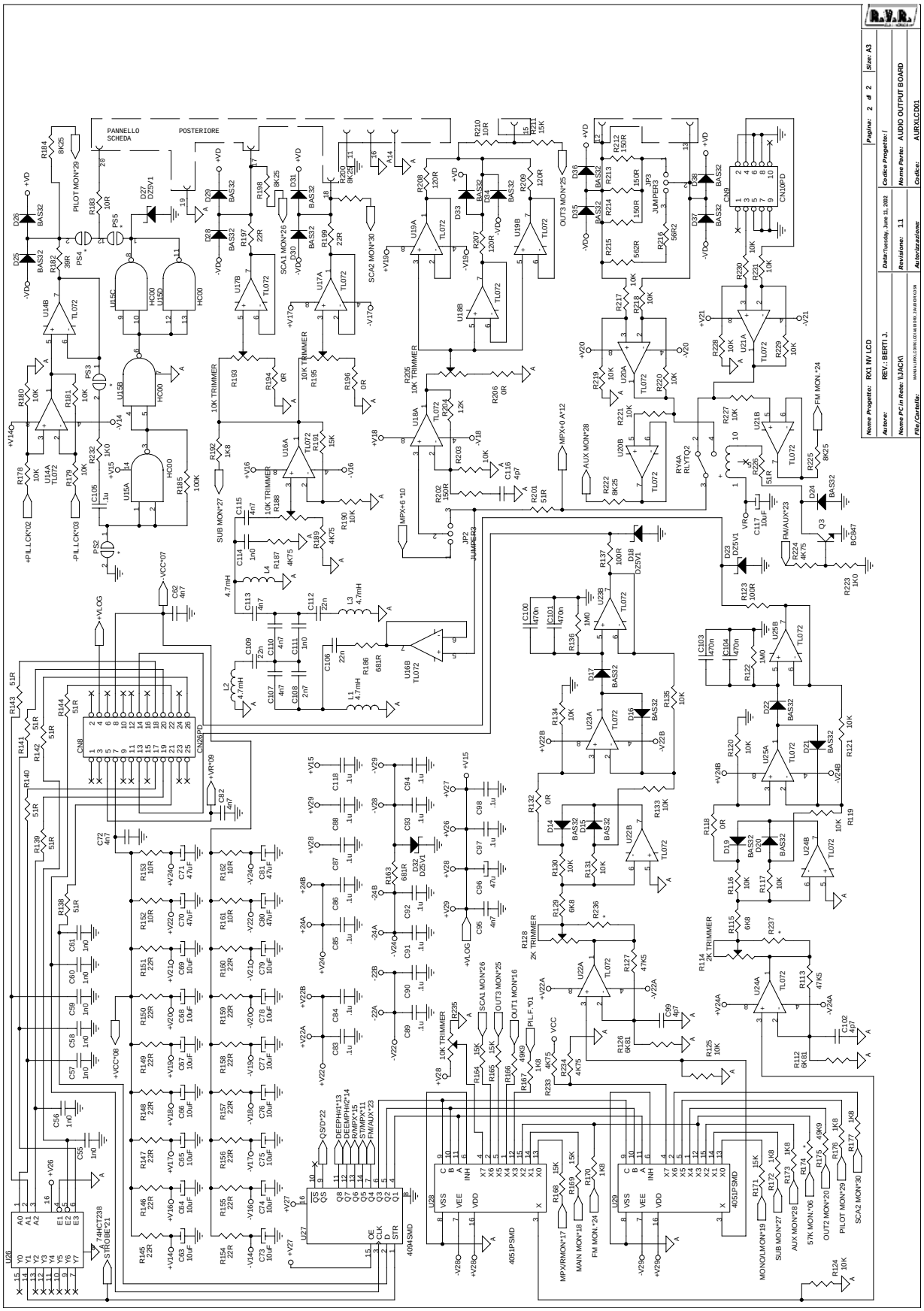
PANNELLO SCHEDA
POSTERIORE
Nome Progetto: RX1 NV LCD
Pagina: 2 di 2
Size: A3
Autore: REV.: BERTI J.
Data:Tuesday, June 11, 2002
Codice Progetto: /
Nome PC in Rete: \\JACK\
Revisione: 1.1
Nome Parte: AUDIO OUTPUT BOARD
File/Cartella:
Autorizzazione:
Codice: AURXLCD01

CSAUDRXLCD01 Bill Of Materials Page 1

Item	Quant.	Reference	Part	Description	Code
1	1	CN1	CN16PD	CONN. M 2X2.54 16PIN	
2	2	CN2,CN9	CN10PD	CONN. M 2X2.54 10PIN	
3	1	CN3	SMB_CS	CONN.SMB A STAMPATO	
4	2	CN4,CN5	CN10PSF	STRIP F 2.54 10 PIN	
5	1	CN6	CN02MPS	CONN. MOLEX 2.54 02P	
6	1	CN7	CN20PD	CONN. M 2X2.54 20PIN	
7	1	CN8	CN26PD	CONN. M 2X2.54 26PIN	
8	7	C1,C2,C3,C100, C101,C103,C104	.47u	COND. CHIP 1206	
9	15	PS1,PS2,PS3,PS4, C4,PS5,R8,R14, C15,C16,R36,R63, R236,R237,R174	*		
10	26	C5,C14,C17,C18, C19,C20,C21,C22, C23,C24,C49,C63, C64,C65,C66,C67, C68,C69,C73,C74, C75,C76,C77,C78, C79,C117	10u	COND. EL. SMD16V	
11	8	C115,C62,C72, C82,C95,C107, C110,C113	4n7	COND. CHIP 0805	
12	6	C6,C7,C8,C10 C11,C12	27pFCH	COND. CHIP 0805	
13	1	C108	2n7	COND. CHIP 0805	
14	18	C25,C29,C33,C37, C41,C42,C43,C44, C45,C46,C47,C48, C50,C70,C71,C80, C81,C96	47u	COND. EL. SMD16V	
15	32	C26,C27,C28,C30, C31,C32,C34,C35, C36,C38,C39,C40, C51,C52,C53,C54, C83,C84,C85,C86, C87,C88,C89,C90, C91,C92,C93,C94, C97,C98,C105,C118	.1u	COND. CHIP 0805	
16	9	C55,C56,C57,C58, C59,C60,C61, C111,C114	1n0	COND. CHIP 0805	
17	3	C99,C102,C116	4p7	COND. CHIP 0805	
18	3	C106,C109,C112	22n	COND. CHIP 0805	
19	33	D1,D2,D3,D4,D5, D6,D7,D8,D9,D10, D11,D12,D14,D15, D16,D17,D19,D20, D21,D22,D24,D25, D26,D28,D29,D30, D31,D33,D34,D35, D36,D37,D38	BAS32	DIODO SIL. MIMIMELF	

20	5	D13,D18,D23,D27, D32	DZ5V1	DIODO ZENER SMD 5V1
21	3	JP1,JP2,JP3	JP3	STRIP M 2.54 3PIN
22	4	L1,L2,L3,L4	4m7H	RF CHOKE
23	3	Q1,Q2,Q3	BC847	TRANSISTOR SOT23
24	4	RY1,RY2,RY3,RY4	RLYTQ212V	RELE' TQ2 12V
25	1	R1	475K	RES. SMD 0805 1%
26	2	R2,R3	221K	RES. SMD 0805 1%
27	17	R4,R5,R20,R30, R38,R39,R40,R45, R67,R68,R71,R72, R187,R189,R224, R233,R234	4K75	RES. SMD 0805 1%
28	4	R6,R7,R11,R12	2K21	RES. SMD 0805 1%
29	3	R9,R123,R137	100	RES. SMD 0805 5%
30	8	R10,R167,R170, R172,R173,R192, R176,R177	1K8	RES. SMD 0805 5%
31	46	R13,R15,R231, R35,R47,R54,R55, R59,R64,R83,R84, R85,R86,R88,R89, R90,R91,R116, R117,R119,R120, R121,R124,R125, R130,R131,R133, R134,R135,R178, R179,R180,R181, R190,R203,R217, R218,R219,R220, R221,R227,R228, R229,R230	10K	RES. SMD 0805 5% R(
32	19	R16,R17,R18,R19, R22,R23,R24,R25, R32,R82,R138, R139,R140,R141, R142,R143,R144, R201,R226	51H	RES. SMD 0805 5%
33	4	R21,R31,R223, R232	1K0	RES. SMD 0805 5%
34	5	R26,R28,R102, R163,R186	680	RES. SMD 0805 5%
35	5	R33,R61,R193, R195,R205	10KTRIMH	TRIM.MULT.3296 RG H
36	11	R34,R50,R51,R62, R77,R78,R118, R132,R194,R196, R206	0	RES. SMD O OHM
37	2	R37,R65	22K1	RES. SMD 0805 1%
38	8	R41,R43,R44,R46, R69,R70,R73,R74	7K15	RES. SMD 0805 1%
39	3	R42,R81,R185	100K	RES. SMD 0805 5%
40	8	R48,R49,R52,R53, R75,R76,R79,R80	33H	RES. SMD 0805 5%

41	10	R56,R60,R66, R164,R165,R168, R169,R171,R191, R211	15K	RES. SMD 0805 5%
42	2	R58,R57	475H	RES. SMD 0805 1%
43	7	R87,R92,R184, R198,R200,R222, R225	8K25	RES. SMD 0805 1%
44	24	R93,R94,R95,R96, R103,R104,R105, R106,R145,R146, R147,R148,R149, R150,R151,R154, R155,R156,R157, R158,R159,R160, R197,R199	22H	RES. SMD 0805 5%
45	16	R97,R98,R99, R100,R101,R107, R108,R109,R110, R111,R152,R153, R161,R162,R183, R210	10H	RES. SMD 0805 5%
46	4	R112,R115,R126, R129	6K8	RES. SMD 0805 5%
47	2	R113,R127	47K5	RES. SMD 0805 1%
48	2	R114,R128	2KTRIM4	TRIM.4X4mm SMD 2K
49	2	R136,R122	1M0	RES. SMD 0805 5%
50	2	R175,R166	49K9	RES. SMD 0805 1%
51	1	R182	39H	RES. SMD 0805 5%
52	2	R235,R188	10KTRIM4	TRIM.4X4mm SMD 10K
53	4	R202,R212,R213, R214	150	RES. SMD 0805 5%
54	1	R204	12K	RES. SMD 0805 5%
55	3	R207,R208,R209	120	RES. SMD 0805 5%
56	1	R215	560	RES. SMD 0805 5%
57	1	R216	56H	RES. SMD 0805 5%
58	22	U1,U2,U5,U6,U7, U8,U9,U10,U11, U12,U13,U14,U16, U17,U18,U19,U20, U21,U22,U23,U24, U25	TL072S	CI LIN. TL072SMD
59	2	U4,U3	4053S	CI DIG. 4053SMD
60	1	U15	74HC00S	CI DIG. 74HC00SMD
61	1	U26	74HC238S	CI DIG. 74HC238SMD
62	1	U27	4094S	CI DIG. 4094SMD
63	2	U28,U29	4051S	CI DIG. 4051SMD
64	1	U30	LM78L05S	CI LIN.78L05SMD SO8
65	2	C9,C13	27pFCH	COND. CHIP 0805
66	2	R27,R29	49k9CH	COND. CHIP 0805

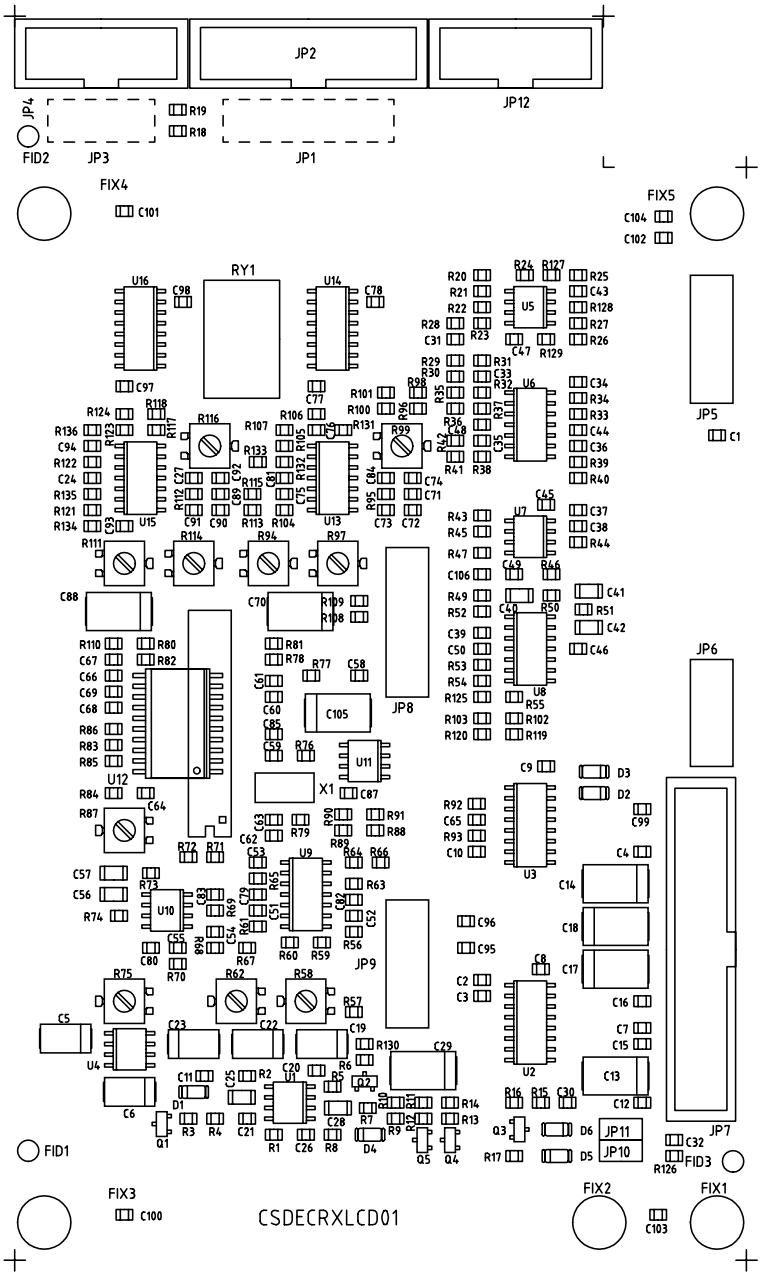

R.V.R. ELETTRONICA	DENOMINAZIONE: MB. DECODER STEREO RX1/RXRLNV-LCD	
	DISPOSITIVO: CSDECRXLCD01	
SEMILAVORATO	DISEGNATO: li	DISEGNO
MATERIALE	SCALA	
TRATTAMENTO		TAVOLA n di

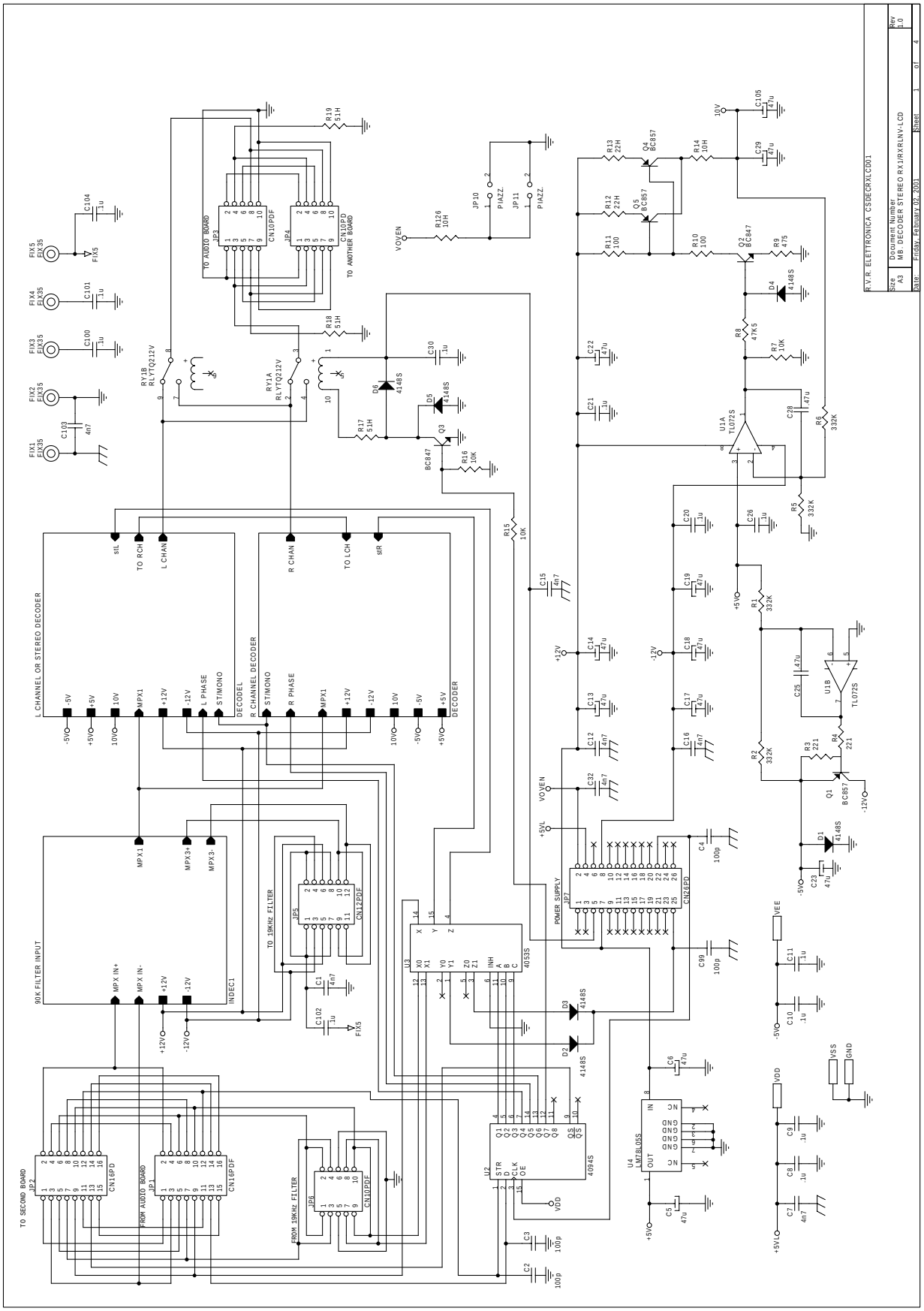
R.V.R. ELETTRONICA CSDECRXLCD01
Size A3
Document Number MB. DECODER STEREO RX1/RXRLNV-LCD
Rev 1.0
Date: Friday, February 02, 2001
Sheet 1 of 4
L CHANNEL OR STEREO DECODER
R CHANNEL DECODER
90K FILTER INPUT
TO AUDIO BOARD
TO ANOTHER BOARD
TO 19KHz FILTER
POWER SUPPLY
TO SECOND BOARD
FROM AUDIO BOARD
FROM 19KHz FILTER
VOVEN
VEE
VDD
VSS
GND

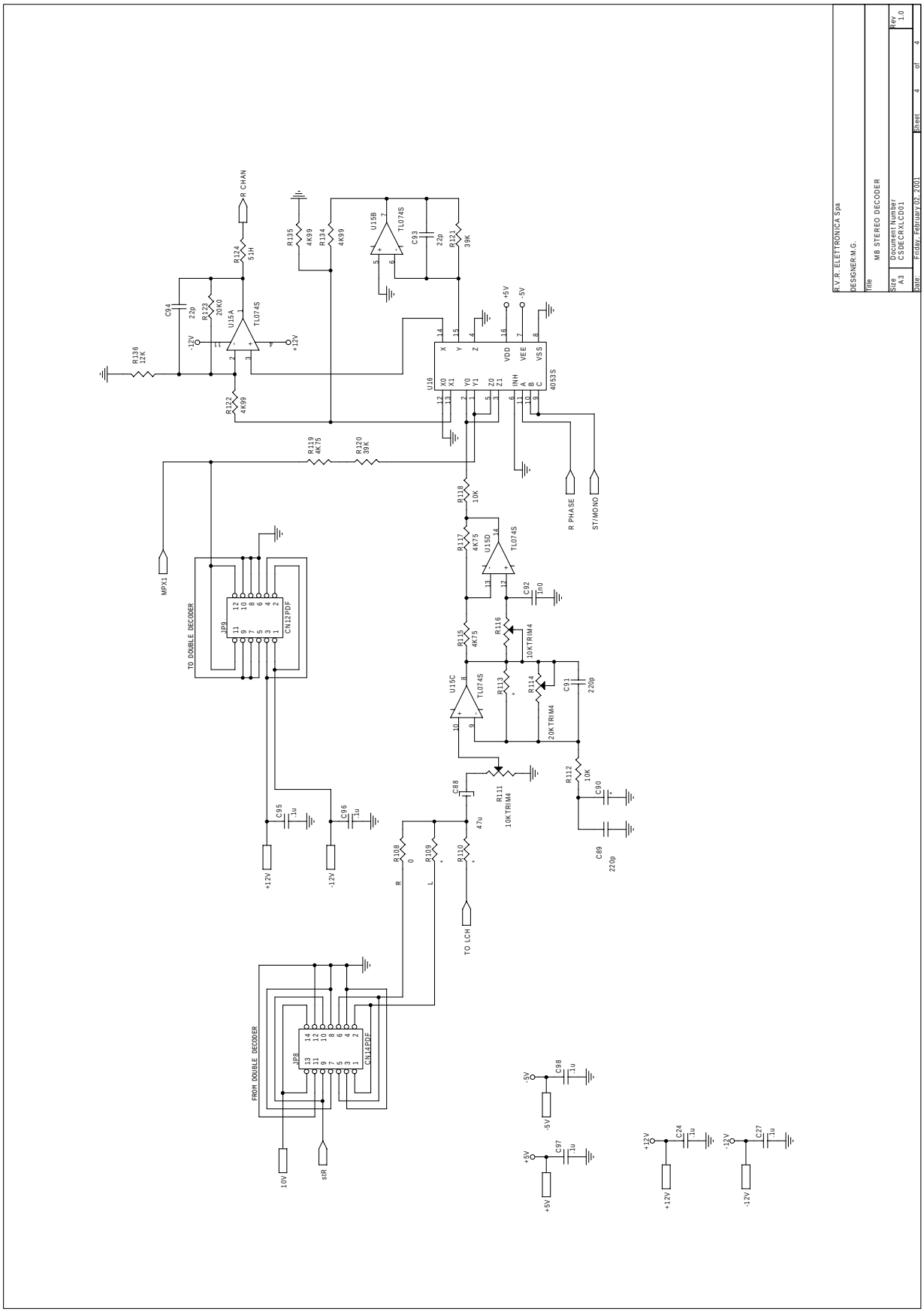
R.V.R. ELETTRONICA Spa
DESIGNER:M.G.
Title MB STEREO DECODER
Size A3
Document Number CSDECRACCD01
Rev 1.0
Date Friday, February 02, 2001
Sheet 4 of 4
R CHAN
R124 51H
R135 4K99
R134 4K99
U15B TL074S
C93 22p
R121 39K
C94 22p
R123 20K0
U15A TL074S
-12V
+12V
+5V
-5V
R126 12K
R122 4K99
U16 4053S
R119 4K75
R120 39K
R118 10K
R117 4K75
U15D TL074S
C92 1n0
R135 4K75
R116 10KTRIM4
U15C TL074S
R113 *
R114 20KTRIM4
C91 220p
R112 10K
C90
C89 220p
C88 47u
R111 10KTRIM4
C95 1u
C96 1u
R108 0
R109 *
R110 *
R
L
MPX1
TO DOUBLE DECODER
JP9 CN12PDF
R PHASE
ST/MONO
TO LCH
FROM DOUBLE DECODER
JP8 CN14PDF
10V
stR
C98 1u
C97 1u
C24 1u
C27 1u

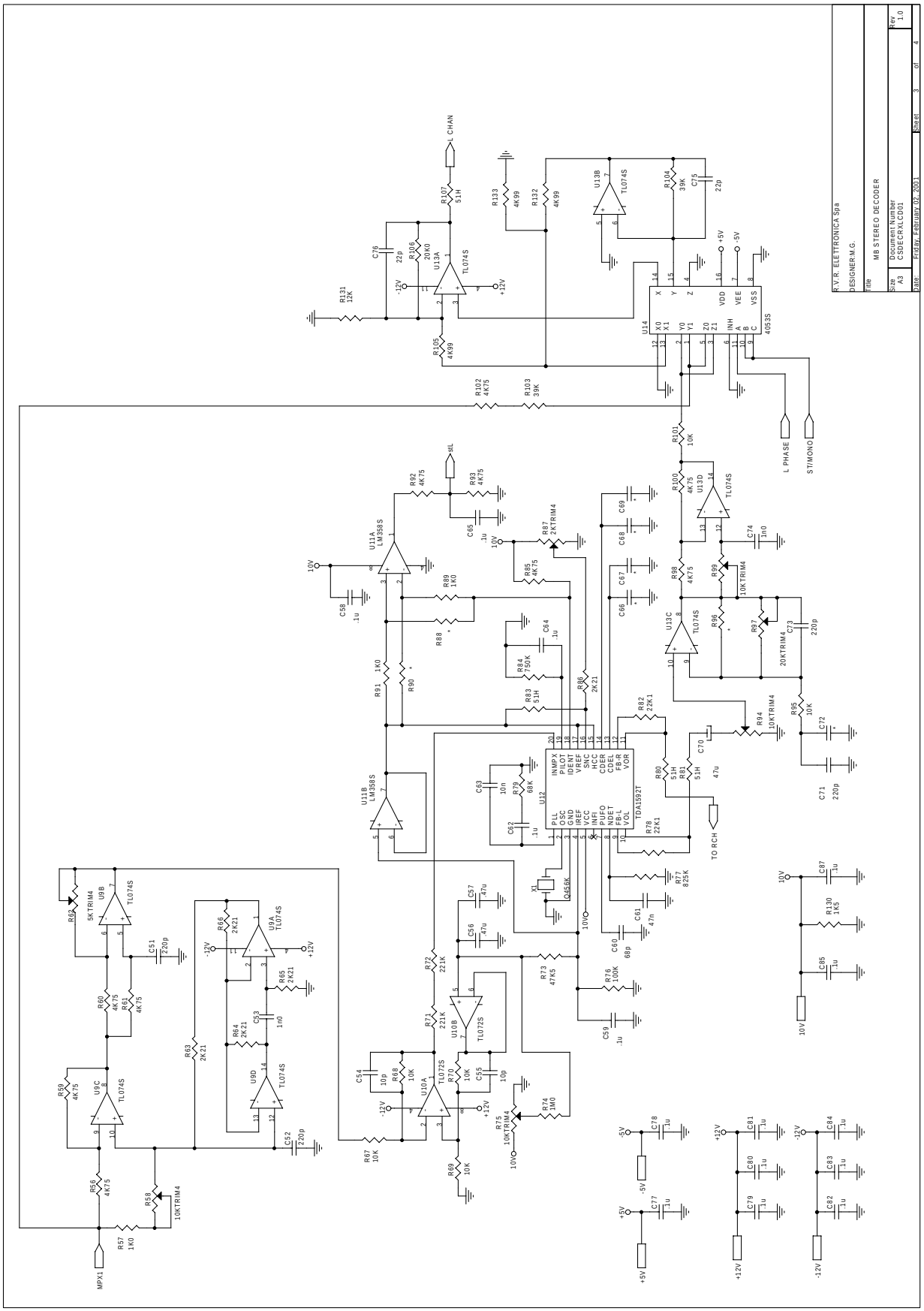
R.V.R. ELETTRONICA Spa
DESIGNER:M.G.
Title
MB STEREO DECODER
Size
A3
Document Number
CSDECRXLCD01
Rev
1.0
Date:
Friday, February 02, 2001
Sheet
3
of
4
L CHAN
L PHASE
ST/MONO
TO RCH
MPX1
TDA1592T
TL074S
LM358S
4053S
TL072S
Q456K

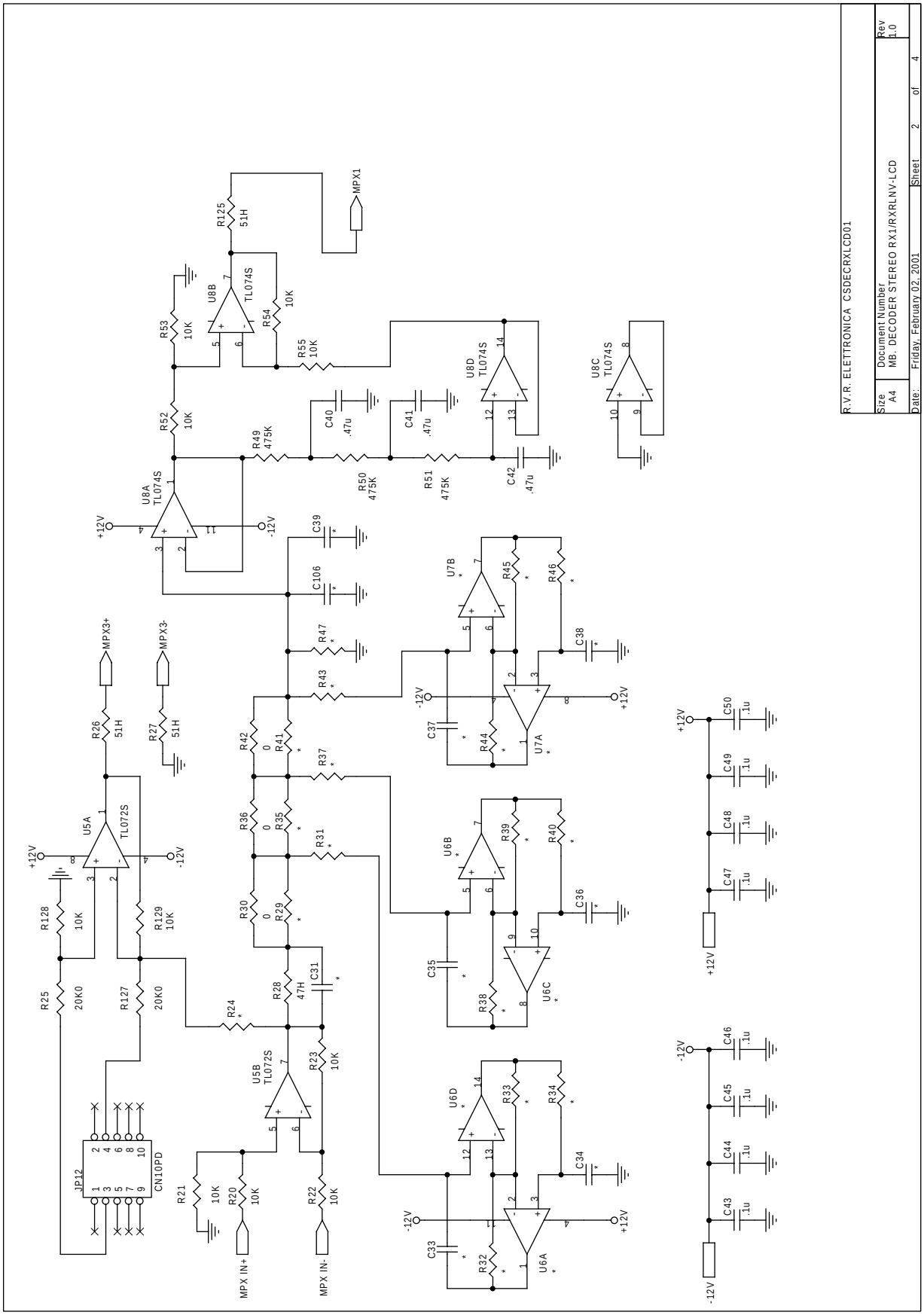
R.V.R. ELETTRONICA CSDECRXLCD01
Size A4
Document Number MB: DECODER STEREO RX1/RXRLNV-LCD
Rev 1.0
Date: Friday, February 02, 2001
Sheet 2 of 4
MPX1
MPX3+
MPX3-
MPX IN+
MPX IN-
+12V
-12V
U5A TL072S
U5B TL072S
U6A
U6B
U6C
U6D
U7A
U7B
U8A TL074S
U8B TL074S
U8C TL074S
U8D TL074S
JP12 CN10PD

MB.DECODER STEREO RX1/RXRLNV-LCD Bill Of Materials Page 1

Item	Quant.	Reference	Part	Description	Code
1	7	C1,C7,C12,C15, C16,C32,C103	4n7	COND. CHIP 0805	
2	4	C2,C3,C4,C99	100p	COND. CHIP 0805	
3	13	C5,C6,C13,C14, C17,C18,C19,C22, C23,C29,C70,C88, C105	47u	COND. EL. SMD16V	
4	41	C8,C9,C10,C11, C20,C21,C24,C26, C27,C30,C43,C44, C45,C46,C47,C48, C49,C50,C58,C59, C62,C64,C65,C77, C78,C79,C80,C81, C82,C83,C84,C85, C87,C95,C96,C97, C98,C100,C101, C102,C104	.1u	COND. CHIP 0805	
5	7	C25,C28,C40,C41, C42,C56,C57	.47u	COND. CHIP 1206	
6	40	U6,U7,R24,R29, R31,C31,R32,R33, C33,R34,C34,R35, C35,C36,R37,C37, R38,C38,R39,C39, R40,R41,R43,R44, R45,R46,R47,C66, C67,C68,C69,C72, R88,R90,C90,R96, C106,R109,R110, R113	*		
7	6	C51,C52,C71,C73, C89,C91	220p	COND. CHIP 0805	
8	3	C53,C74,C92	1n0	COND. CHIP 0805	
9	2	C54,C55	10p	COND. CHIP 0805	
10	1	C60	68p	COND. CHIP 0805	
11	1	C61	47n	COND. CHIP 0805	
12	1	C63	10n	COND. CHIP 0805	
13	4	C75,C76,C93,C94	22p	COND. CHIP 0805	
14	6	D1,D2,D3,D4,D5, D6	4148S	DIODO SIL. MINIMELF	
15	1	JP1	CN16PDF	STRIP F 2X2.54 16 PIN	
16	1	JP2	CN16PD	CONN. M 2X2.54 16PIN	
17	2	JP6,JP3	CN10PDF	STRIP F 2X2.54 10 PIN	
18	2	JP4,JP12	CN10PD	CONN. M 2X2.54 10PIN	
19	2	JP5,JP9	CN12PDF	STRIP F 2X2.54 12 PIN	
20	1	JP7	CN26PD	CONN. M 2X2.54 26PIN	
21	1	JP8	CN14PDF	STRIP F 2X2.54 14 PIN	
22	3	Q1,Q4,Q5	BC857	TRANSISTOR SOT23	
23	2	Q3,Q2	BC847	TRANSISTOR SOT23	
24	1	RY1	RLYTQ212V	RELE' TQ2 12V	
25	4	R1,R2,R5,R6	332K	RES. SMD 0805 1%	
26	2	R3,R4	221H	RES. SMD 0805 1%	
27	21	R7,R15,R16,R20, R21,R22,R23,R52, R53,R54,R55,R67, R68,R69,R70,R95, R101,R112,R118, R128,R129	10K	RES. SMD 0805 5%	
28	2	R8,R73	47K5	RES. SMD 0805 1%	
29	1	R9	475H	RES. SMD 0805 1%	
30	2	R11,R10	100	RES. SMD 0805 5%	
31	2	R12,R13	22H	RES. SMD 0805 5%	
32	1	R14,R126	10H	RES. SMD 0805 5%	
33	4	R25,R106,R123, R127	20K0	RES. SMD 0805 1%	
34	12	R17,R18,R19,R26, R27,R80,R81,R83, R107,R124,R125	51H	RES. SMD 0805 5%	
35	1	R28	47H	RES. SMD 0805 5%	
36	4	R30,R36,R42,R108	0	RES. SMD O OHM	

37	3	R49,R50,R51	475K	RES. SMD 0805 1%
38	13	R56,R59,R60,R61, R85,R92,R93,R98, R100,R102,R115, R117,R119	4K75	RES. SMD 0805 1%
39	3	R57,R89,R91	1K0	RES. SMD 0805 5%
40	6	R58,R75,R94,R99, R111,R116	10KTRIM4	TRIM.4X4mm SMD 10K
41	1	R62	5KTRIM4	TRIM.4X4mm SMD 5K
42	5	R63,R64,R65,R66, R86	2K21	RES. SMD 0805 1%
43	2	R71,R72	221K	RES. SMD 0805 1%
44	1	R74	1M0	RES. SMD 0805 5%
45	1	R76	100K	RES. SMD 0805 5%
46	1	R77	825K	RES. SMD 0805 1%
47	2	R82,R78	22K1	RES. SMD 0805 1%
48	1	R79	68K	RES. SMD 0805 5%
49	1	R84	750K	RES. SMD 0805 1%
50	1	R87	2KTRIM4	TRIM.4X4mm SMD 2K
51	2	R97,R114	20KTRIM4	TRIM.4X4mm SMD 20K
52	4	R103,R104,R120, R121	39K	RES. SMD 0805 5%
53	6	R105,R122,R132, R133,R134,R135	4K99	RES. SMD 0805 1%
54	1	R130	1K5	RES. SMD 0805 5%
55	2	R131,R136	12K	RES. SMD 0805 5%
56	3	U1,U5,U10	TL072S	CI LIN. TL072SMD
57	1	U2	4094S	CI DIG. 4094SMD
58	3	U3,U14,U16	4053S	CI DIG. 4053SMD
59	1	U4	LM78L05S	CI LIN.78L05SMD SO8
60	4	U8,U9,U13,U15	TL074S	CI LIN. TL074SMD
61	1	U11	LM358S	CI LIN. LM358SMD
62	1	U12	TDA1592T	CI LIN.TDA1592T SO20
63	1	X1	Q456K	RIS. CER. 456KHz

Pagina lasciata intenzionalmente in bianco

This page was intentionally left blank

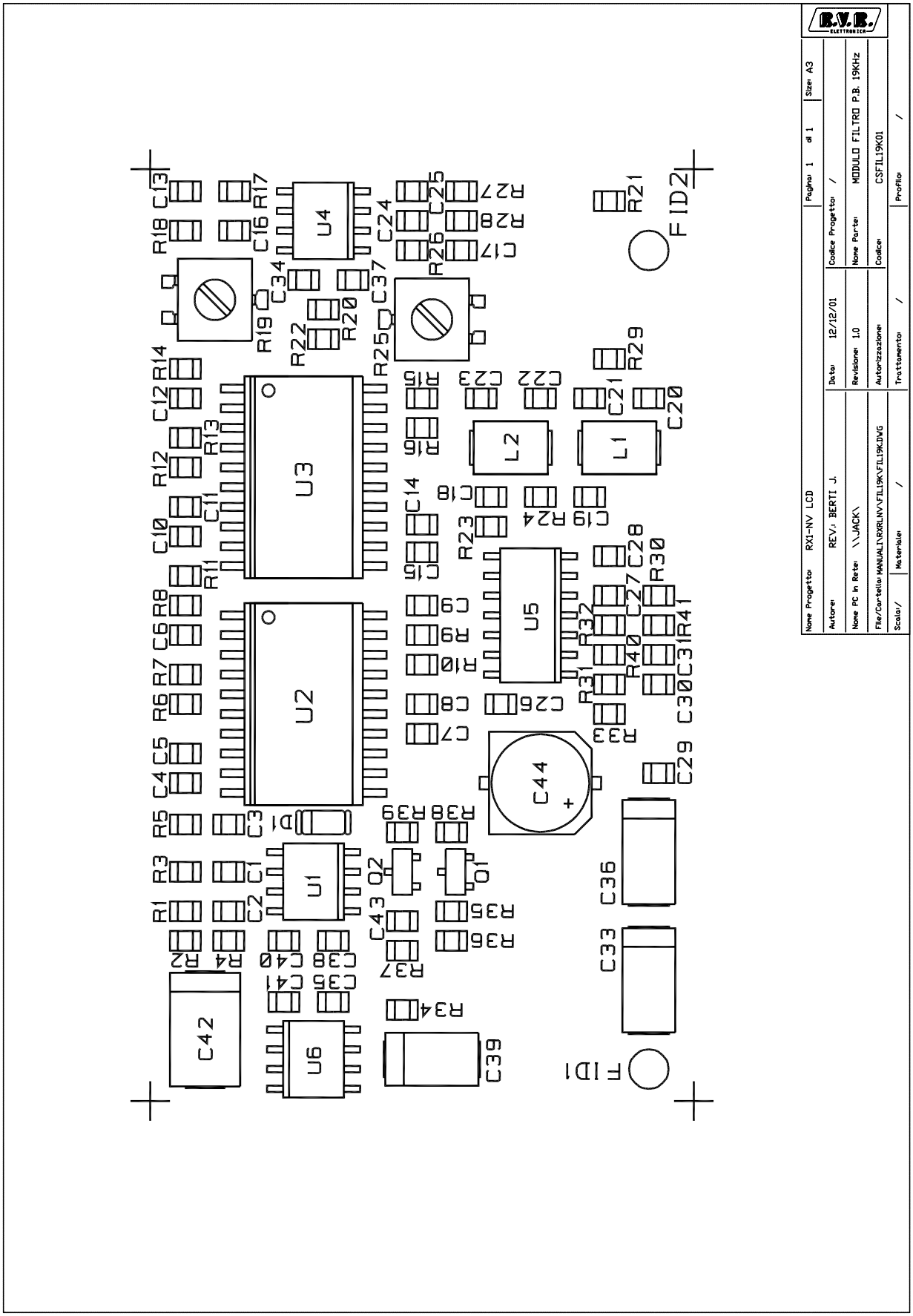
Nome Progetto: RX1-NV LCD
Pagina: 1 di 1
Size: A3
Autore: REV: BERTI J.
Data: 12/12/01
Codice Progetto: /
Nome PC in Rete: \\JACK\
Revisione: 1.0
Nome Parte: MODULO FILTRO P.B. 19KHz
File/Cartella: MANUALI\RXRLNV\FIL19K\FIL19K.DWG
Autorizzazione:
Codice: CSFIL19K01
Scala: /
Materiale: /
Trattamento: /
Profilo: /
U1
U2
U3
U4
U5
U6
L1
L2
F1
D2
T1
D1

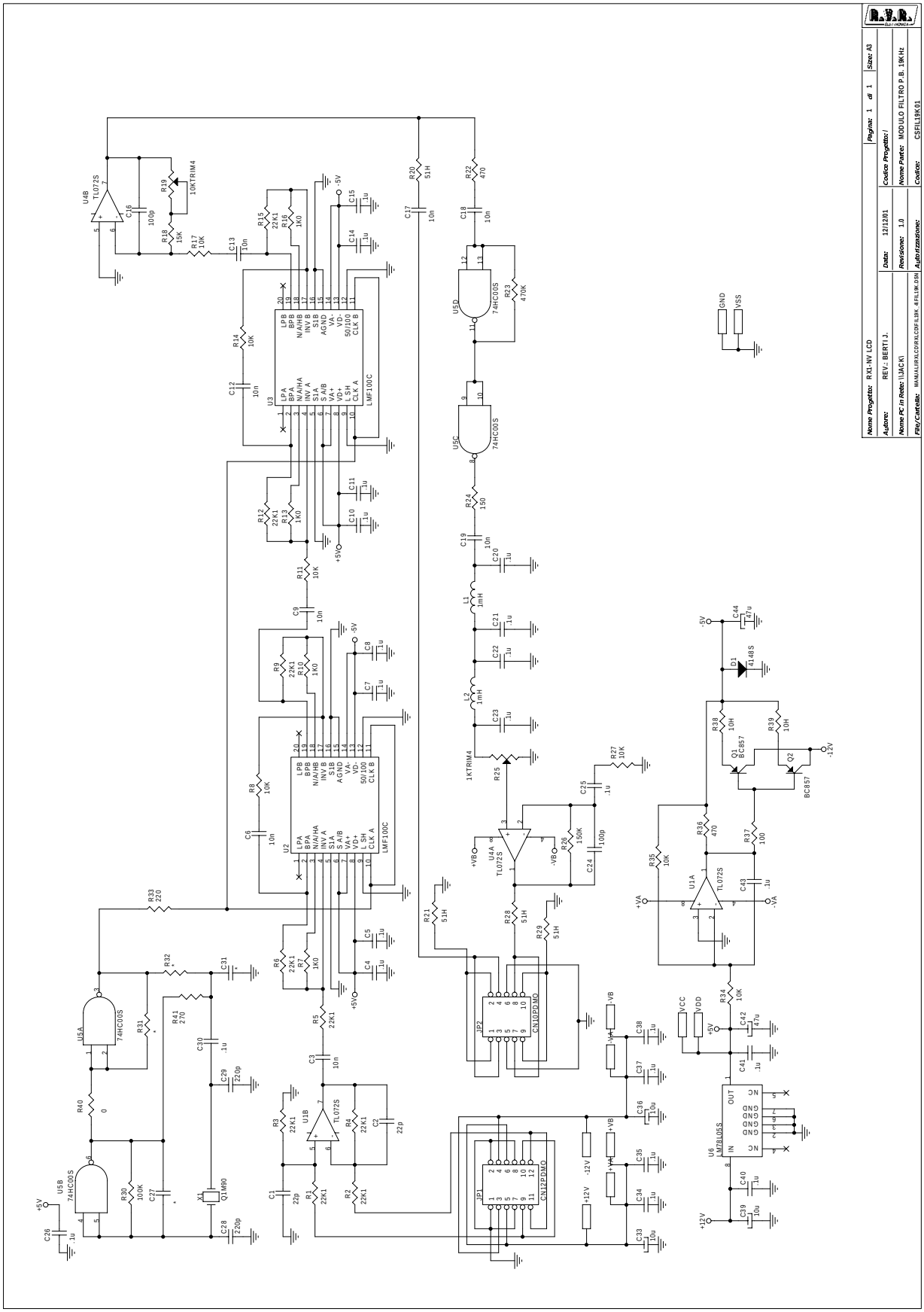
Nome Progetto: RX1-NV LCD
Autore: REV.: BERTI J.
Nome PC in Rete: \\JACK\
File/Cartella: MANUALI\RX\LCD\FIL19K.4\FIL19K.DSN
Data: 12\12\01
Revisione: 1.0
Autorizzazione:
Pagina: 1 di 1
Size: A3
Codice Progetto: /
Nome Parte: MODULO FILTRO P.B. 19KHz
Codice: CSFIL19K01

CSFIL19K01 Bill Of Materials Page 1

Item	Quant.	Reference	Part	Description
1	2	C1,C2	22p	COND. CHIP 0805
2	8	C3,C6,C9,C12, C13,C17,C18,C19	10n	COND. CHIP 0805
3	22	C4,C5,C7,C8,C10, C11,C14,C15,C20, C21,C22,C23,C25, C26,C30,C34,C35, C37,C38,C40,C41, C43	.1u	COND. CHIP 0805
4	2	C24,C16	100p	COND. CHIP 0805
5	4	C27,R31,C31,R32	*	
6	2	C28,C29	220p	COND. CHIP 0805
7	3	C33,C36,C39	10u	COND. EL. SMD16V
8	2	C42,C44	47u	COND. EL. SMD16V
9	1	D1	4148S	DIODO SIL. MINIMELF
10	1	JP1	CN12PDMO	STRIP M 2X2.54 12 PIN90
11	1	JP2	CN10PDMO	STRIP M 2X2.54 10 PIN90
12	2	L1,L2	1mH	IMPEDENZA SMD 1812
13	2	Q1,Q2	BC857	TRANSISTOR SOT23
14	9	R1,R2,R3,R4,R5, R6,R9,R12,R15	22K1	RES. SMD 0805 1%
15	4	R7,R10,R13,R16	1K0	RES. SMD 0805 5%
16	7	R8,R11,R14,R17, R27,R34,R35	10K	RES. SMD 0805 5%
17	1	R19	10KTRIM4	TRIM.4X4mm SMD 10K
18	4	R20,R21,R28,R29	51H	RES. SMD 0805 5%
19	2	R22,R36	470	RES. SMD 0805 5%
20	1	R23	470K	RES. SMD 0805 5%
21	1	R24	150	RES. SMD 0805 5%
22	1	R25	1KTRIM4	TRIM.4X4mm SMD 1K
23	1	R26	150K	RES. SMD 0805 5%
24	1	R30	100K	RES. SMD 0805 5%
25	1	R33	220	RES. SMD 0805 5%
26	1	R37	100	RES. SMD 0805 5%
27	2	R39,R38	10H	RES. SMD 0805 5%
28	1	R40	0	RES. SMD O OHM
29	1	R41	270	RES. SMD 0805 5%
30	2	U1,U4	TL072S	CI LIN. TL072SMD
31	2	U2,U3	LMF100C	CI LIN.LMF100C SO20W

32	1	U5	74HC00S	CI DIG. 74HC00SMD
33	1	U6	LM78L05S	CI LIN.78L05SMD SO8
34	1	X1	Q1M90	QUARZO 1.90MHz HC33
35	1	R18	15K	RES. SMD 0805 5%

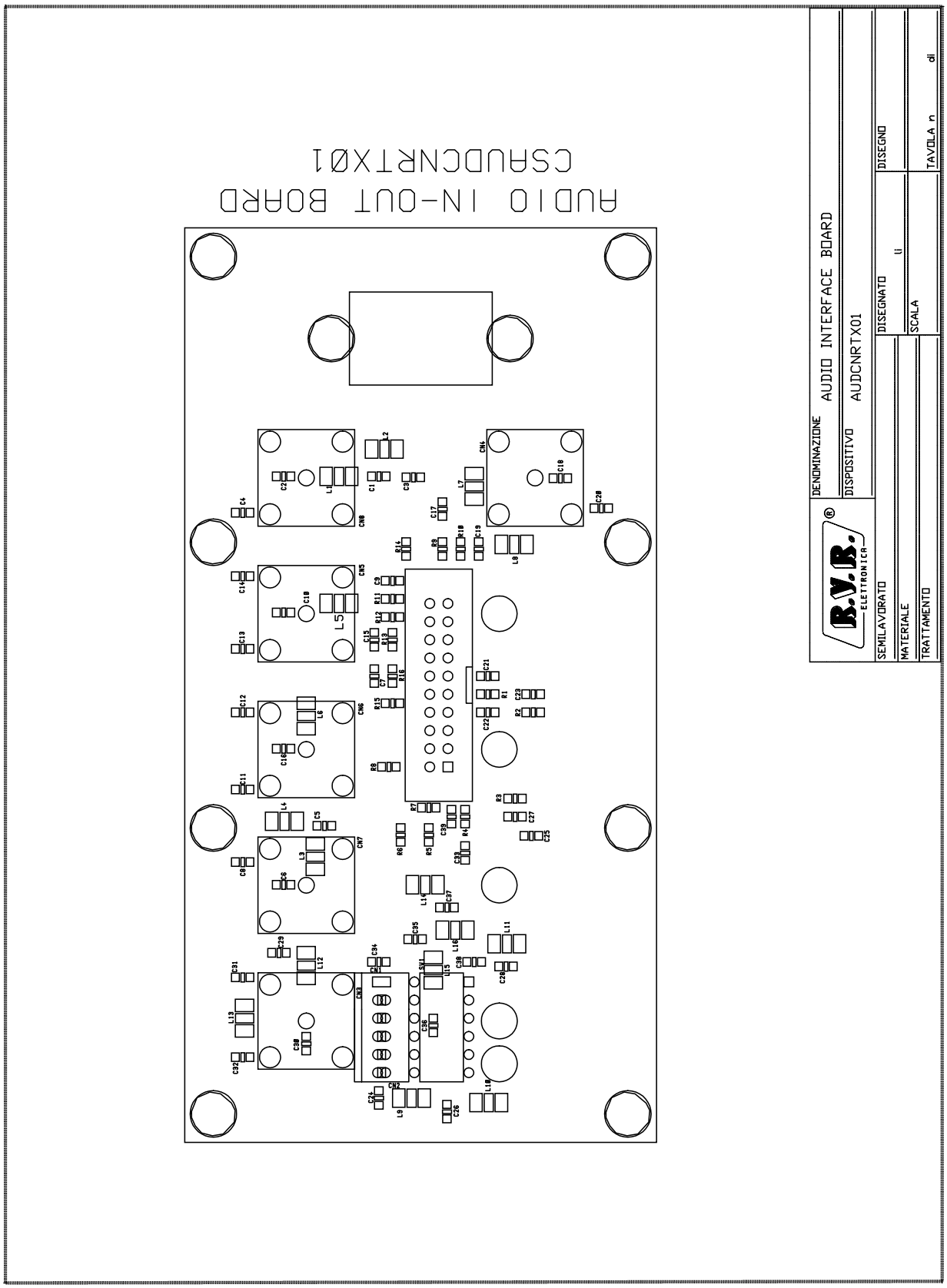
AUDIO IN-OUT BOARD
CSAUDCNRTX01
DENOMINAZIONE AUDIO INTERFACE BOARD
DISPOSITIVO AUDCNRTX01
DISEGNATO IZ
DISEGNO
SCALA
TAVOLA n
di
SEMILAVORATO
MATERIALE
TRATTAMENTO
R.V.R. ELETTRONICA

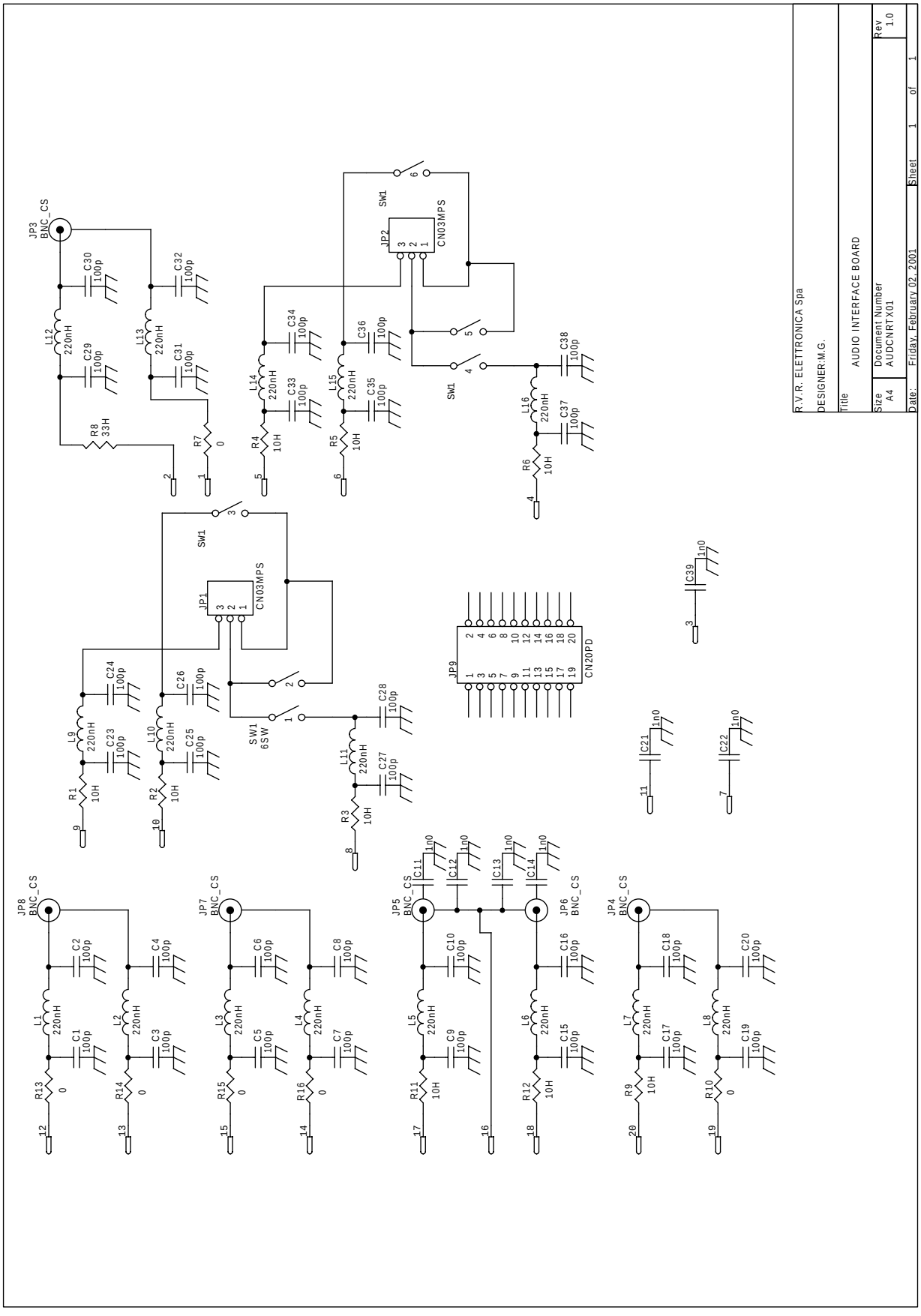
R.V.R. ELETTRONICA Spa
DESIGNER:M.G.
Title AUDIO INTERFACE BOARD
Size A4
Document Number AUDCNRTX01
Rev 1.0
Date: Friday, February 02, 2001
Sheet 1 of 1
JP3 BNC_CS
JP8 BNC_CS
JP7 BNC_CS
JP5 BNC_CS
JP6 BNC_CS
JP4 BNC_CS
JP1 CN03MPS
JP2 CN03MPS
JP9 CN20PD
SW1
SW1 6SW
L1 220nH
L2 220nH
L3 220nH
L4 220nH
L5 220nH
L6 220nH
L7 220nH
L8 220nH
L9 220nH
L10 220nH
L11 220nH
L12 220nH
L13 220nH
L14 220nH
L15 220nH
L16 220nH
C1 100p
C2 100p
C3 100p
C4 100p
C5 100p
C6 100p
C7 100p
C8 100p
C9 100p
C10 100p
C11 1n0
C12 1n0
C13 1n0
C14 1n0
C15 100p
C16 100p
C17 100p
C18 100p
C19 100p
C20 100p
C21 1n0
C22 1n0
C23 100p
C24 100p
C25 100p
C26 100p
C27 100p
C28 100p
C29 100p
C30 100p
C31 100p
C32 100p
C33 100p
C34 100p
C35 100p
C36 100p
C37 100p
C38 100p
C39 1n0
R1 10H
R2 10H
R3 10H
R4 10H
R5 10H
R6 10H
R7 0
R8 33H
R9 10H
R10 0
R11 10H
R12 10H
R13 0
R14 0
R15 0
R16 0

AUDIO INTERFACE BOARD RTX AUDCNRTX01 Bill Of Materials Page 1

Item	Quant.	Reference	Part	Description	Code
1	32	C1,C2,C3,C4,C5, C6,C7,C8,C9,C10, C15,C16,C17,C18, C19,C20,C23,C24, C25,C26,C27,C28, C29,C30,C31,C32, C33,C34,C35,C36, C37,C38	100p	COND. CHIP 0805	
2	7	C11,C12,C13,C14, C21,C22,C39	1n0	COND. CHIP 0805	
3	2	JP1,JP2	CN03MPS	CONN. MOLEX 2.54 03P	
4	6	JP3,JP4,JP5,JP6, JP7,JP8	BNC_CS	CONN. BNC CS	
5	1	JP9	CN20PD	CONN. M 2X2.54 20PIN	
6	16	L1,L2,L3,L4,L5, L6,L7,L8,L9,L10, L11,L12,L13,L14, L15,L16	220nH	IMPEDENZA SMD 1210	
7	9	R1,R2,R3,R4,R5, R6,R9,R11,R12	10H	RES. SMD 0805 5%	
8	6	R7,R10,R13,R14, R15,R16	0	RES. SMD O OHM	
9	1	R8	33H	RES. SMD 0805 5%	
10	1	SW1	6SW	DIP SWITCH 6 VIE	

Pagina lasciata intenzionalmente in bianco

This page was intentionally left blank

PIANO MONTAGGIO PSSWRLNEW

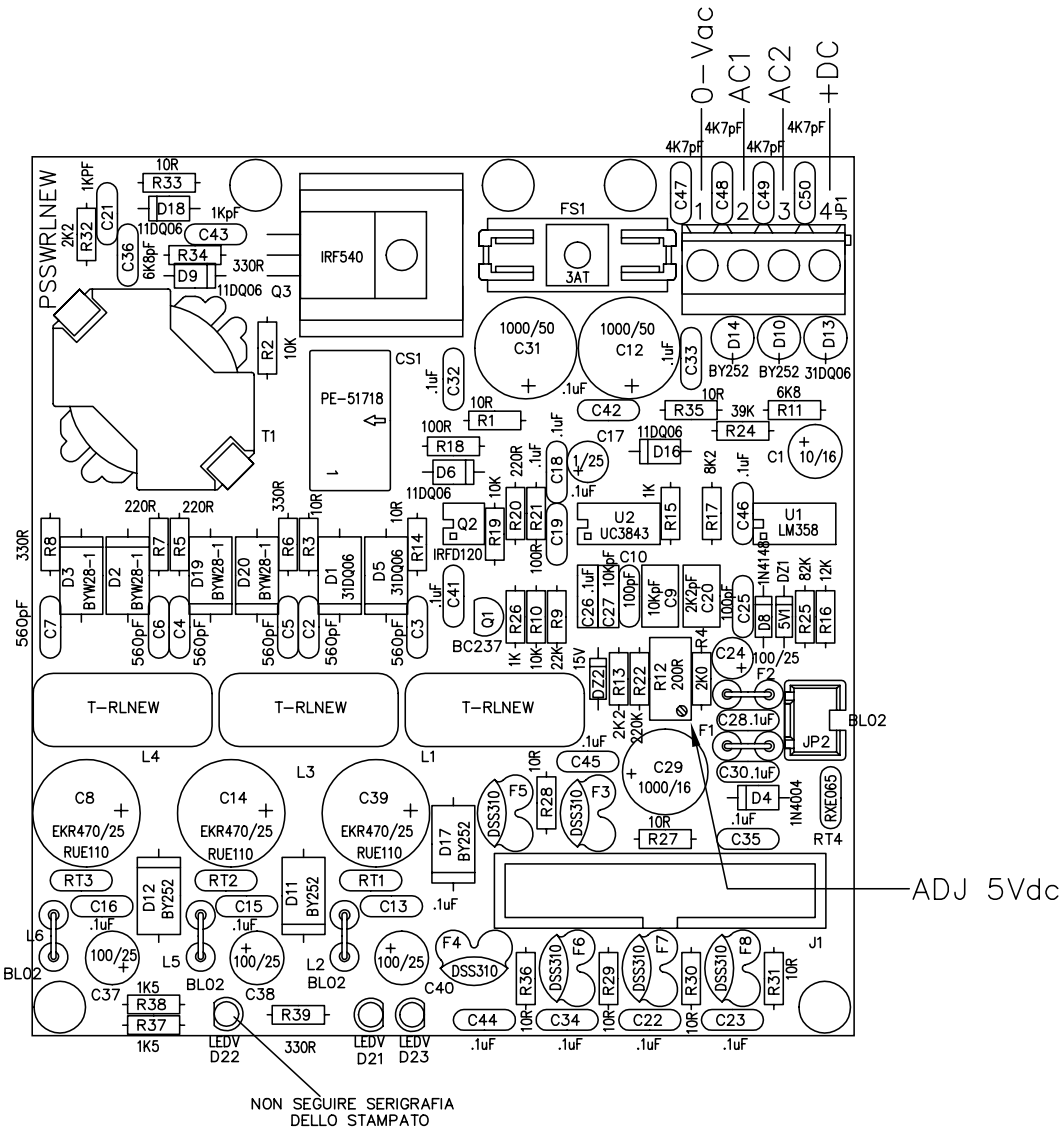

R.V.R. ELETTRONICA ®	DENOMINAZIONE POWER SUPPLY +5V +13V −13V	
	DISPOSITIVO PSSWRLNEW	
SEMILAVORATO	DISEGNATO li	DISEGNO
MATERIALE	SCALA	
TRATTAMENTO		TAVOLA n di

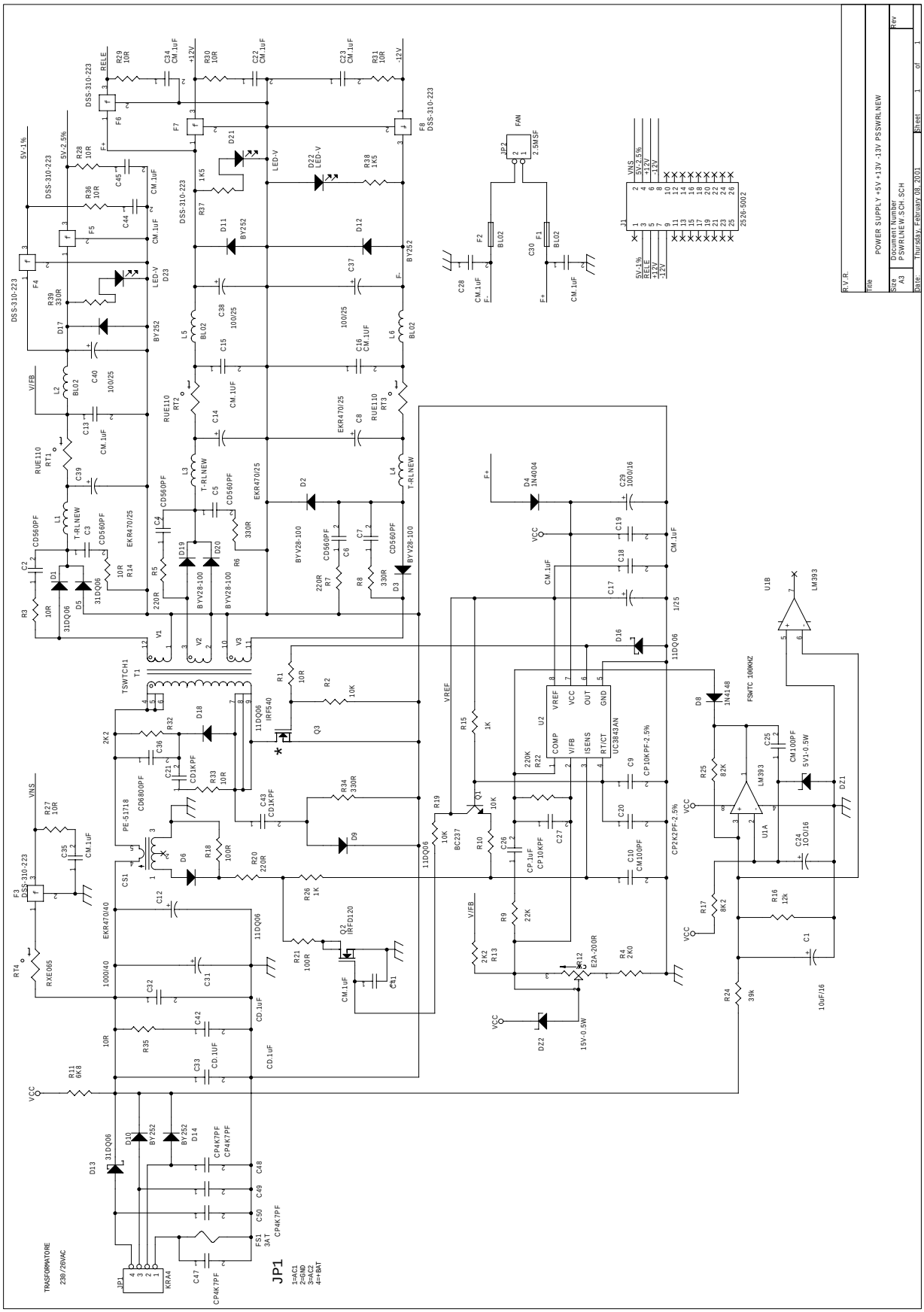
POWER SUPPLY +5V +13V -13V PSSWRLNEW
PSWRLNEW.SCH.SCH
Thursday, February 08, 2001
TRASFORMATORE
230/26VAC
JP1
1=AC1
2=GND
3=AC2
4=+BAT
UC3843AN
FSWTC 100KHZ
LM393
2526-5002

POWER SUPPLY +5V +13V -13V PSSWRLNEW Bill Of Materials Page 1

Item	Quantity	Reference	Part
1	1	CS1	PE-51718
2	1	C1	10uF/16
3	6	C2,C3,C4,C5,C6,C7	CD560PF
4	3	C8,C14,C39	EKR470/25
5	1	C9	CP10KPF-2.5%
6	2	C10,C25	CM100PF
7	1	C12	EKR470/40
8	14	C13,C15,C16,C18,C19,C22, C23,C28,C30,C34,C35,C41, C44,C45	CM.1uF
9	1	C17	1/25
10	1	C20	CP2K2PF-2.5%
11	2	C21,C43	CD1KPF
12	1	C24	1OO/16
13	1	C26	CP.1uF
14	1	C27	CP10KPF
15	1	C29	1000/16
16	1	C31	1000/40
17	3	C32,C33,C42	CD.1uF
18	1	C36	CD6800PF
19	3	C37,C38,C40	100/25
20	4	C47,C48,C49,C50	CP4K7PF
21	1	DZ1	5V1-0.5W
22	1	DZ2	15V-0.5W
23	3	D1,D5,D13	31DQ06
24	4	D2,D3,D19,D20	BYV28-100
25	1	D4	1N4004
26	4	D6,D9,D16,D18	11DQ06
27	1	D8	1N4148
28	5	D10,D11,D12,D14,D17	BY252
29	3	D21,D22,D23	LED-V
30	1	FS1	3AT
31	5	F1,L2,F2,L5,L6	BL02
32	6	F3,F4,F5,F6,F7,F8	DSS-310-223
33	1	JP1	KRA4
34	1	JP2	2.5MSF
35	1	J1	2526-5002

36	3	L1,L3,L4	T-RLNEW
37	1	Q1	BC237
38	1	Q2	IRFD120
39	1	Q3	IRF540
40	3	RT1,RT2,RT3	RUE110
41	1	RT4	RXE065
42	11	R1,R3,R14,R27,R28,R29, R30,R31,R33,R35,R36	10R
43	3	R2,R10,R19	10K
44	1	R4	2K0
45	3	R5,R7,R20	220R
46	4	R6,R8,R34,R39	330R
47	1	R9	22K
48	1	R11	6K8
49	1	R12	E2A-200R
50	2	R13,R32	2K2
51	2	R15,R26	1K
52	1	R16	12k
53	1	R17	8K2
54	2	R21,R18	100R
55	1	R22	220K
56	1	R24	39k
57	1	R25	82K
58	2	R38,R37	1K5
59	1	T1	TSWTCH1
60	1	U1	LM393
61	1	U2	UC3843AN

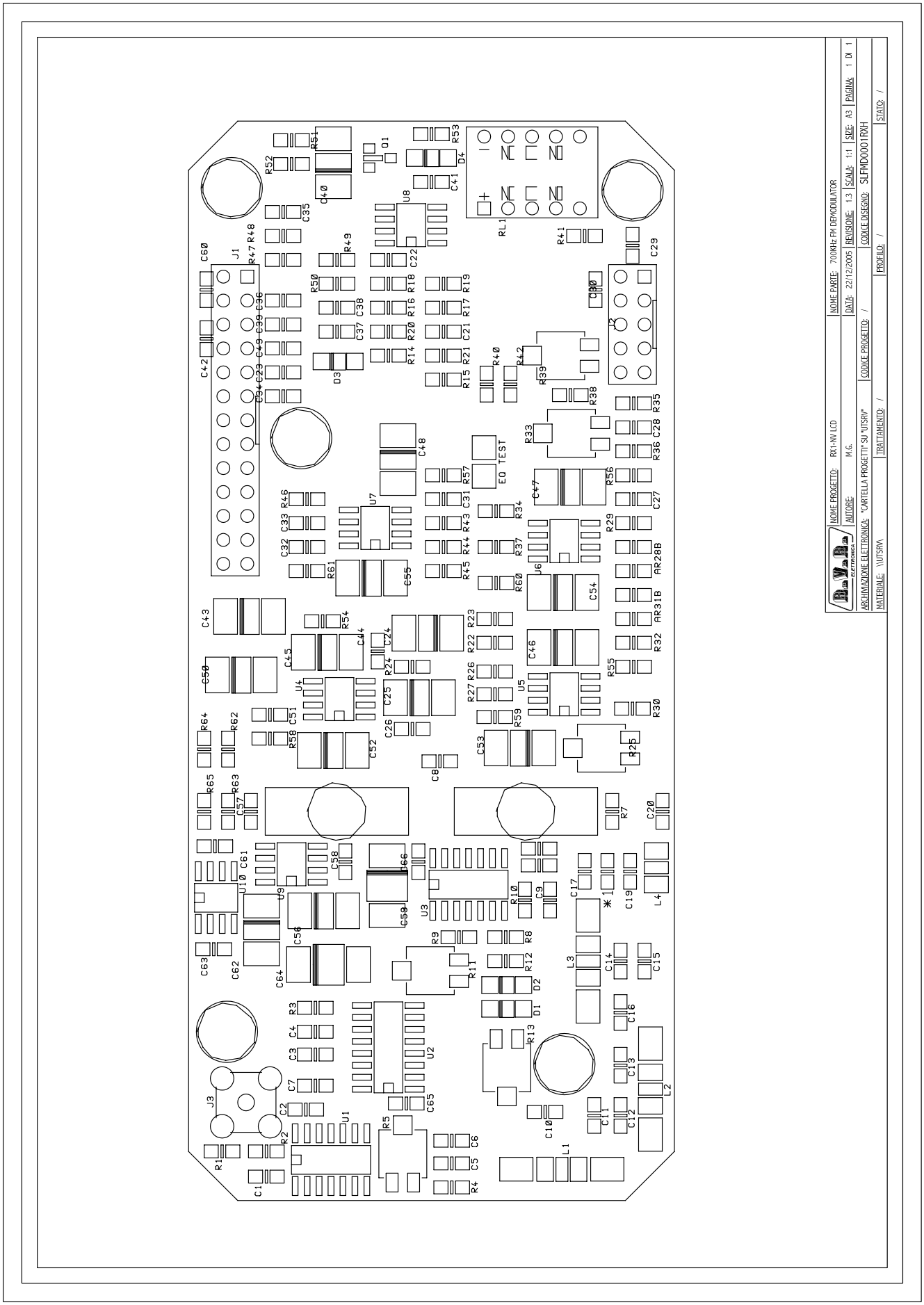
NOME PROGETTO: RX1-NV LCD
AUTORE: M.G.
DATA: 22/12/2005
REVISIONE: 1.3
SCALA: 1:1
SIZE: A3
PAGINA: 1 DI 1
ARCHIVIAZIONE ELETTRONICA: "CARTELLA PROGETTI" SU "UTSRV"
CODICE PROGETTO: /
CODICE DISEGNO: SLFMD0001RXH
MATERIALE: \\UTSRV\
TRATTAMENTO: /
PROFILO: /
STATO: /
NOME PARTE: 700kHz FM DEMODULATOR
EQ TEST

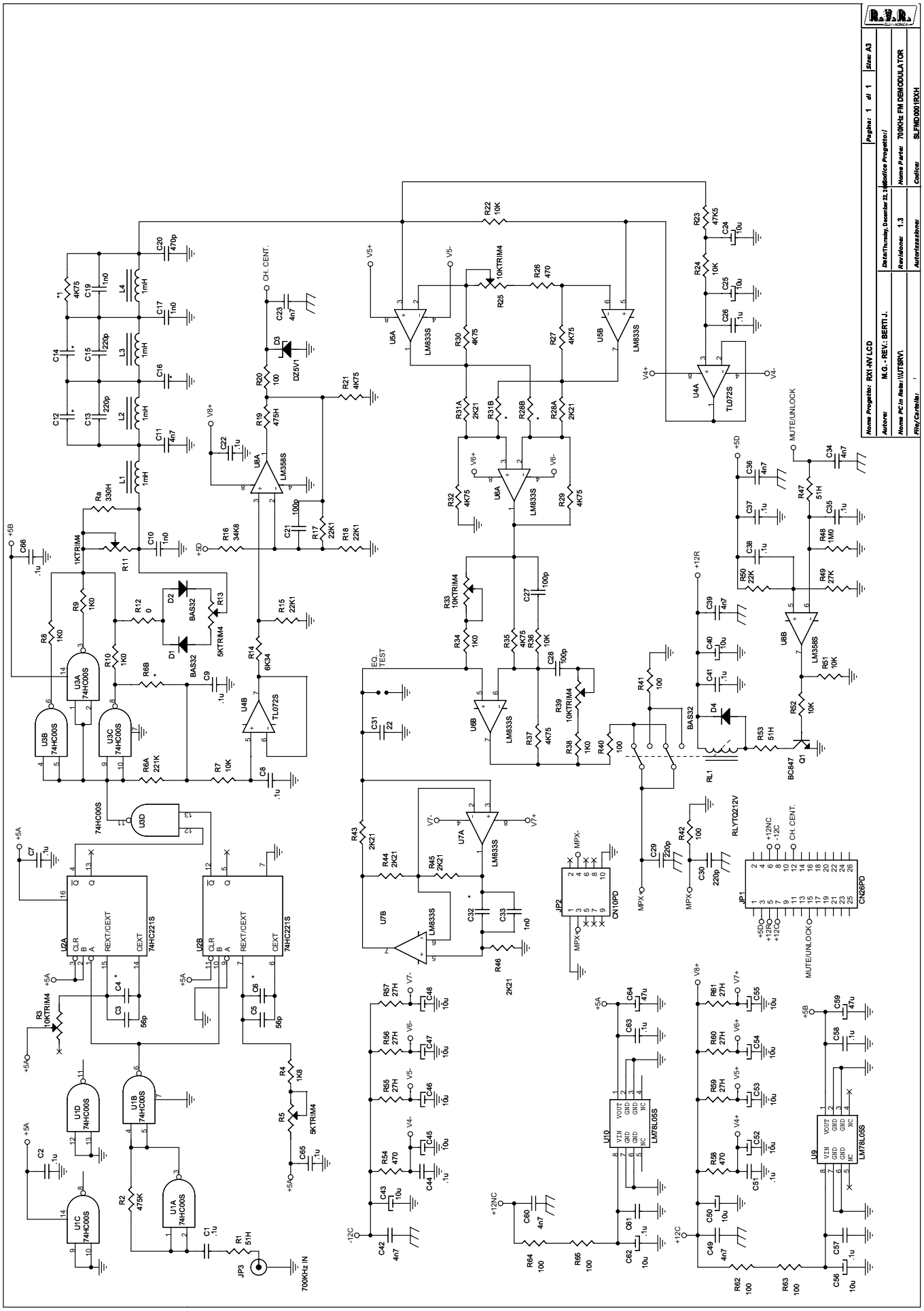
Nome Progetto: RX1-NV LCD
Autore: M.G. - REV.: BERTI J.
Nome PC in Rete: \\UTSRV\
File/Cartella: \
Data/Thursday, December 22, 2
Revisione: 1.3
Autorizzazione:
Pagina: 1 di 1
Size: A3
Modifica Progetto:
Nome Parte: 700KHz FM DEMODULATOR
Codice: SLFMD0001RXH
700KHz IN
MUTE/UNLOCK
MPX
CH. CENT.
EQ. TEST

700KHz FM DEMODULATOR Revised: Thursday, December 22, 2005
SLFMD0001RXH Revision: 1.3
/
M.G. - REV.: BERTI J.

5	4	C10, C17, C19, C33	1n0
7	4	C13, C15, C29, C30	220p
8	1	C20	470p
9	3	C21, C27, C28	100p
10	15	C24, C25, C40, C43, C45, C46, C47, C48, C50, C52, C53, C54, C55, C56, C62	10u
11	1	C31	22
12	2	C59, C64	47u
13	3	D1, D2, D4	BAS32
14	1	D3	DZ5V1
15	1	JP1	CN26PD
16	1	JP2	CN10PD
17	1	JP3	SMB_CS
18	4	L1, L2, L3, L4	1mH
19	1	Q1	BC847
20	1	RL1	RLYTQ212V
21	1	Ra	330H
22	3	R1, R47, R53	51H
23	1	R2	475K
24	4	R3, R25, R33, R39	10KTRIM4
25	1	R4	1K8
26	2	R5, R13	5KTRIM4
27	1	R6A	221K
28	6	R7, R22, R24, R36, R51, R52	10K
29	5	R8, R9, R10, R34, R38	1K0
30	1	R11	1KTRIM4
31	1	R12	0
32	1	R14	6K34
33	3	R15, R17, R18	22K1
34	1	R16	34K8
35	1	R19	475H
36	8	R20, R40, R41, R42, R62, R63, R64, R65	100
37	1	R23	47K5
38	3	R26, R54, R58	470
39	6	R28A, R31A, R43, R44, R45, R46	2K21
40	1	R48	1M0
41	1	R49	27K
42	1	R50	22K
43	6	R55, R56, R57, R59, R60, R61	27H
44	2	U1, U3	74HC00S
45	1	U2	74HC221S
46	1	U4	TL072S
47	3	U5, U6, U7	LM833S
48	1	U8	LM358S
49	2	U9, U10	LM78L05S

Pagina lasciata intenzionalmente in bianco

This page was intentionally left blank

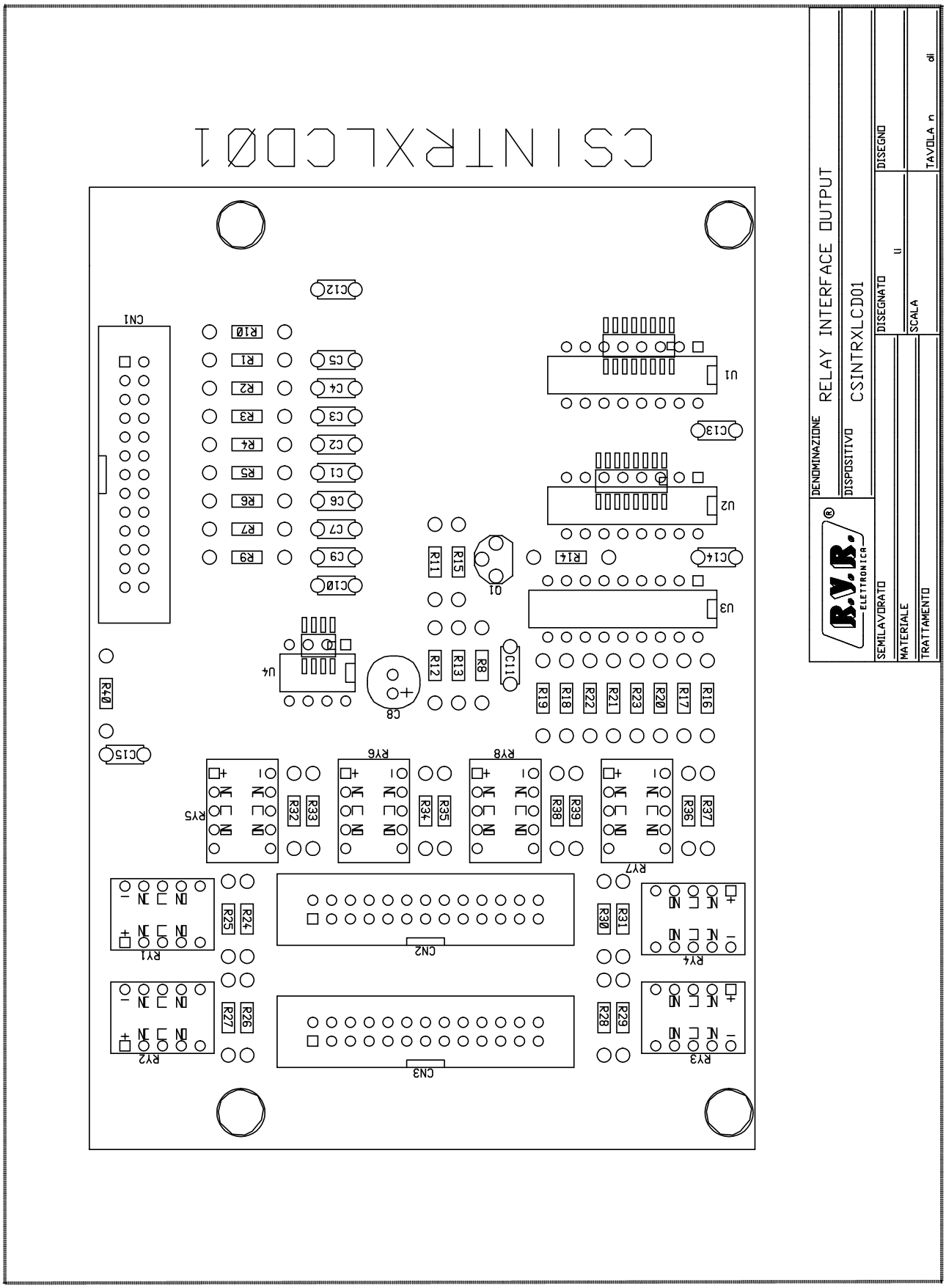
CSINTRXLCD01
DENOMINAZIONE
RELAY INTERFACE OUTPUT
DISPOSITIVO
CSINTRXLCD01
DISEGNATO
DISEGNO
SCALA
TAVOLA n
di
SEMILAVORATO
MATERIALE
TRATTAMENTO
R.V.R. ELETTRONICA
CN1
CN2
CN3
U1
U2
U3
U4
Q1
C8
C11
C12
C13
C14
C15
R40
RY1
RY2
RY3
RY4
RY5
RY6
RY7
RY8

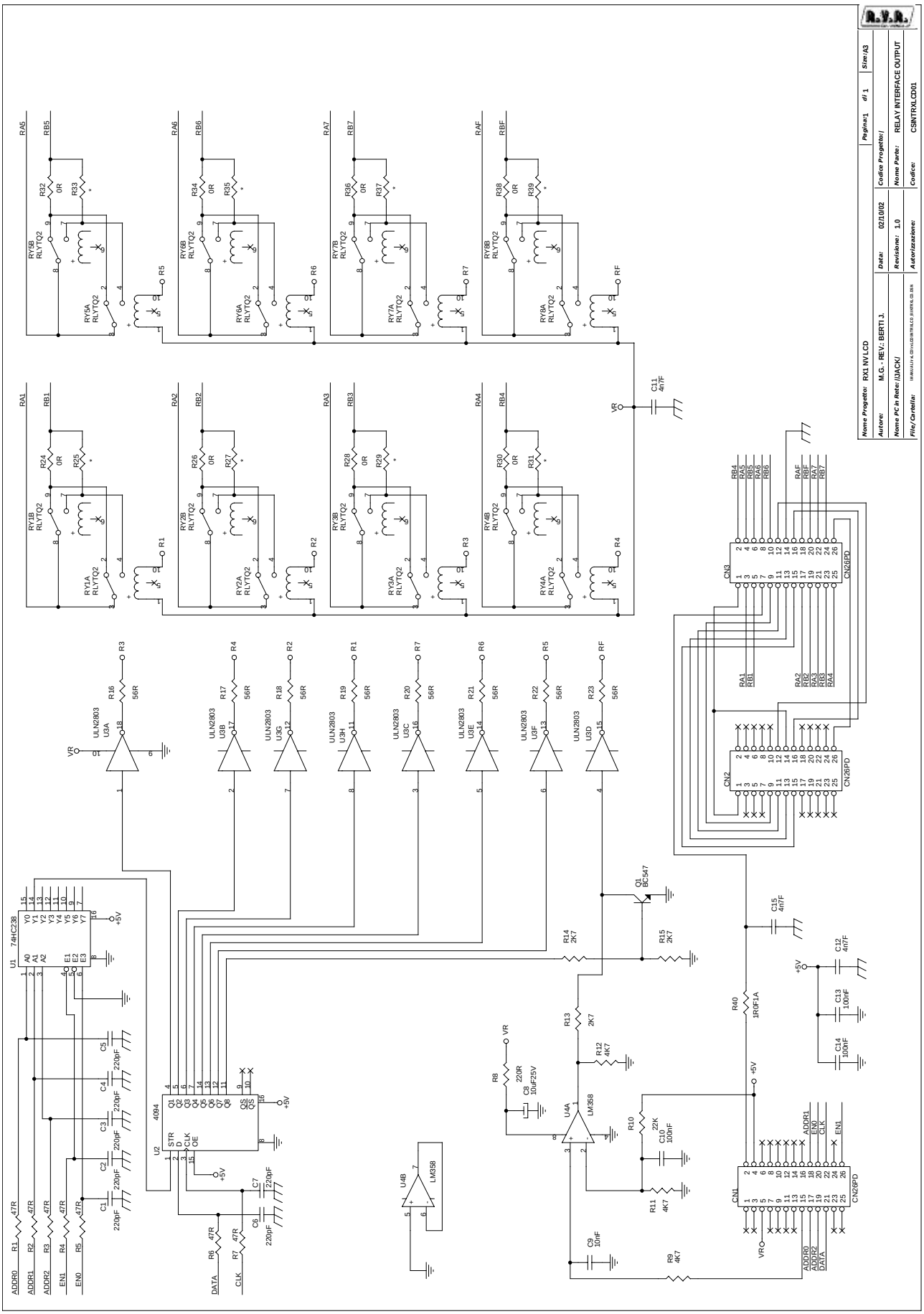
Nome Progetto: RX1 NV LCD
Autore: M.G. - REV.: BERTI J.
Nome PC in Rete: //JACK/
File/ Cartella:
Pagina:1 di 1
Size:A3
Codice Progetto:
Data: 02/10/02
Revisione: 1.0
Autorizzazione:
Nome Parte: RELAY INTERFACE OUTPUT
Codice: CSINTRXLCD01
RY1B RLYTQ2
RY1A RLYTQ2
RY2B RLYTQ2
RY2A RLYTQ2
RY3B RLYTQ2
RY3A RLYTQ2
RY4B RLYTQ2
RY4A RLYTQ2
RY5B RLYTQ2
RY5A RLYTQ2
RY6B RLYTQ2
RY6A RLYTQ2
RY7B RLYTQ2
RY7A RLYTQ2
RY8B RLYTQ2
RY8A RLYTQ2
ULN2803
74HC238
4094
LM358
BC547
CN26PD
CN1
CN2
CN3
ADDR0
ADDR1
ADDR2
EN1
EN0
DATA
CLK
+5V
VR

INTERFACCIA DT RX1-LCD Bill Of Materials Page 1

Item	Quantity	Reference	Part
1	3	CN1,CN2,CN3	CN26PD
2	7	C1,C2,C3,C4,C5,C6,C7	220pF P.5
3	1	C8	10uF25V P.2.54
4	1	C9	10nF P.5
5	3	C10,C13,C14	100nF P.5
6	3	C11,C12,C15	4n7F P.5
7	1	Q1	BC547
8	8	RY1,RY2,RY3,RY4,RY5,RY6, RY7,RY8	RLYTQ212V
9	7	R1,R2,R3,R4,R5,R6,R7	47R 1/4W
10	1	R8	220R 1/4W
11	3	R9,R11,R12	4K7 1/4W
12	1	R10	22K 1/4W
13	3	R13,R14,R15	2K7 1/4W
14	8	R16,R17,R18,R19,R20,R21, R22,R23	56R 1/4W
15	8	R24,R26,R28,R30,R32,R34, R36,R38	0R
16	8	R25,R27,R29,R31,R33,R35, R37,R39	*
17	1	R40	1R0F1A RES. FUS. 1A
18	1	U1	74HC238
19	1	U2	4094
20	1	U3	ULN2803
21	1	U4	LM358

Pagina lasciata intenzionalmente in bianco

This page was intentionally left blank

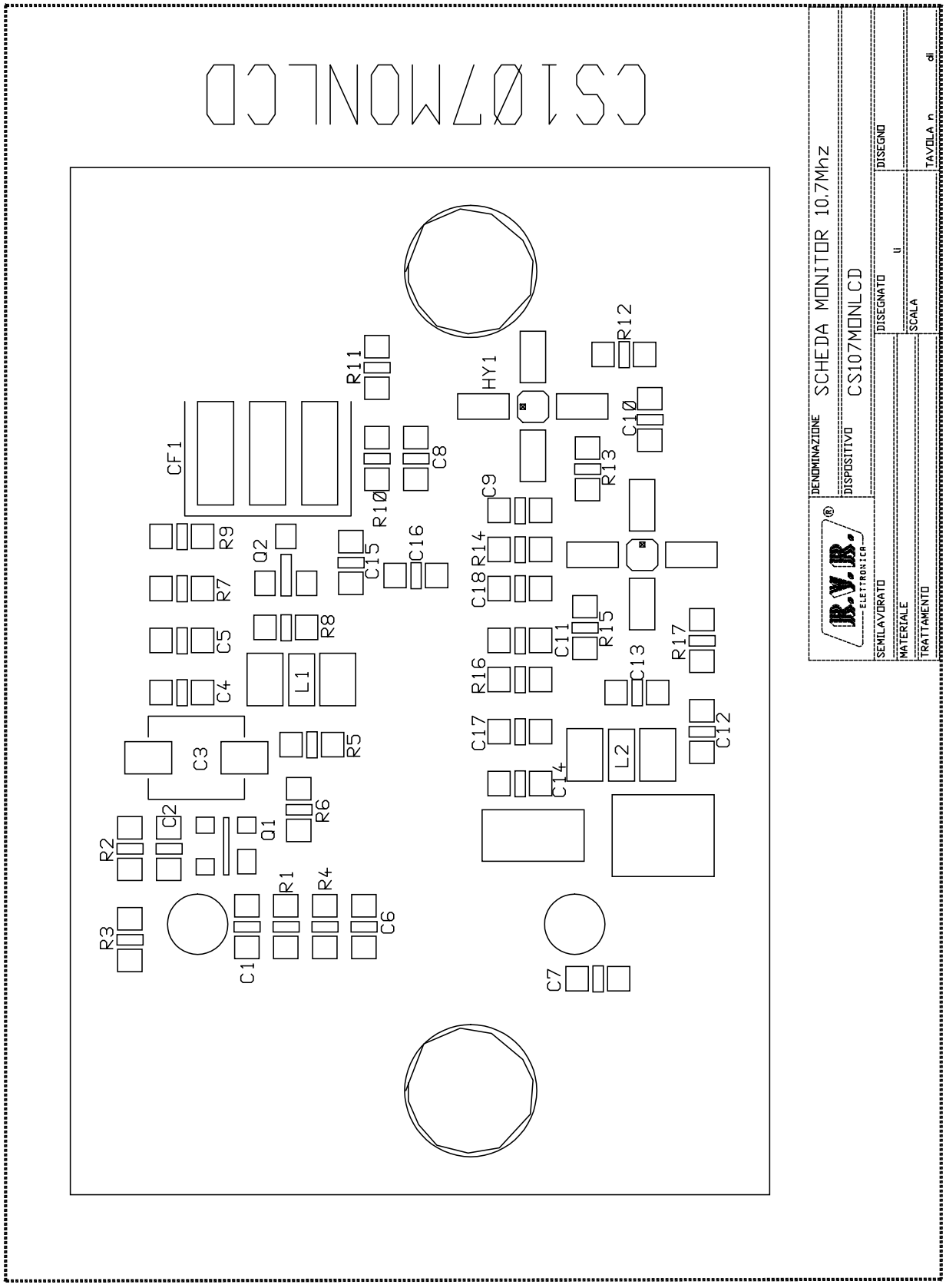
CS107MONLCD
DENOMINAZIONE SCHEDA MONITOR 10.7Mhz
DISPOSITIVO CS107MONLCD
DISEGNATO
SCALA
DISEGNO
TAVOLA n
di
SEMILAVORATO
MATERIALE
TRATTAMENTO
R.V.R. ELETTRONICA
CF1
HY1
R1
R2
R3
R4
R5
R6
R7
R8
R9
R10
R11
R12
R13
R14
R15
R16
R17
C1
C2
C3
C4
C5
C6
C7
C8
C9
C10
C11
C12
C13
C14
C15
C16
C17
C18
Q1
Q2
L1
L2

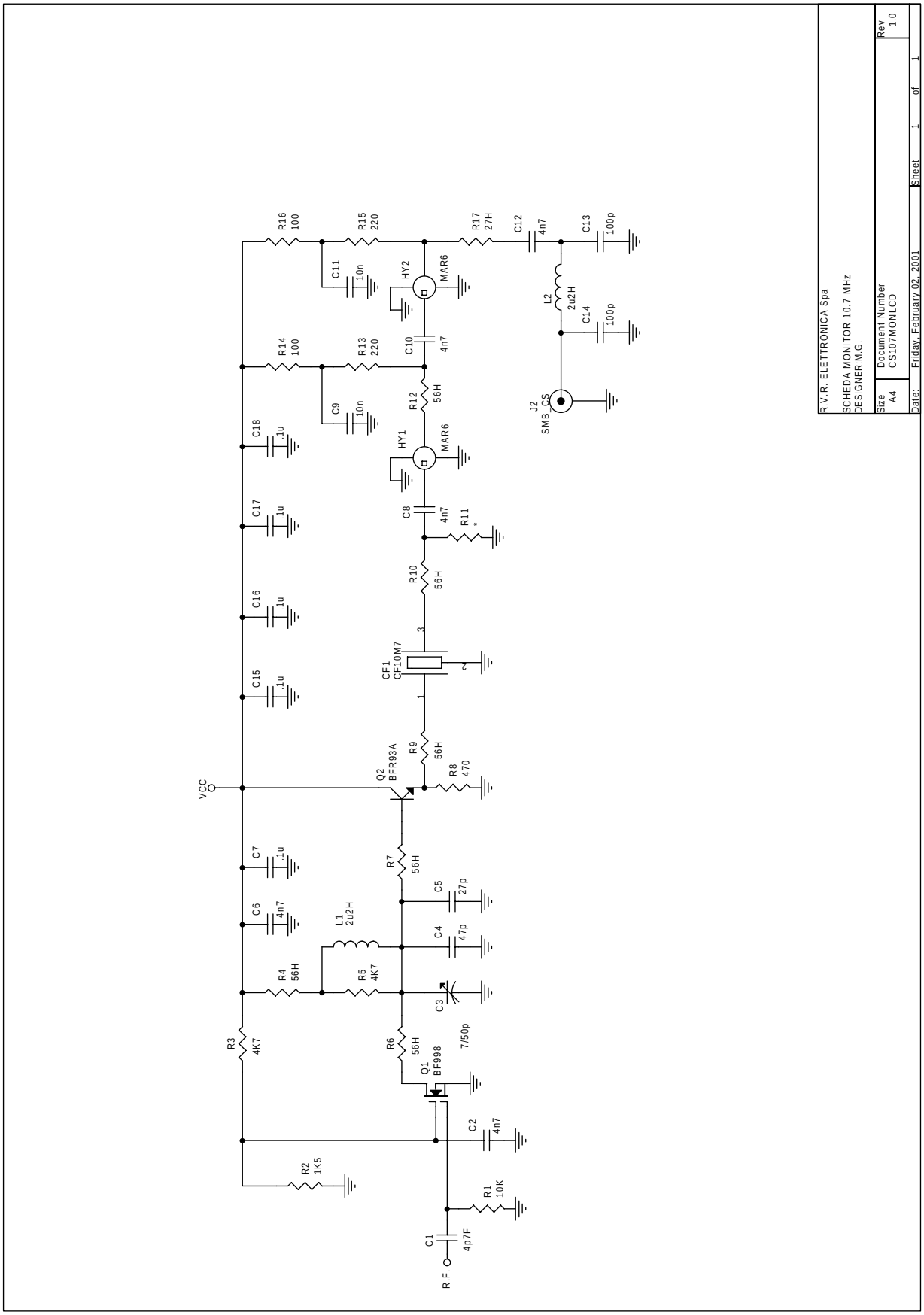
R.V.R. ELETTRONICA Spa
SCHEDA MONITOR 10.7 MHz
DESIGNER:M.G.
Size: A4
Document Number: CS107MONLCD
Rev: 1.0
Date: Friday, February 02, 2001
Sheet 1 of 1
R16 100
R15 220
R17 27H
C12 4n7
C13 100p
C11 10n
HY2
MAR6
L2 2u2H
C14 100p
R14 100
R13 220
C10 4n7
J2 SMB CS
C9 10n
R12 56H
C18 1u
HY1
MAR6
C17 1u
C8 4n7
R11 *
R10 56H
C16 1u
CF1 CF10M7
C15 1u
R9 56H
Q2 BFR93A
R8 470
VCC
C7 1u
R7 56H
C5 27p
C6 4n7
L1 2u2H
C4 47p
R4 56H
R5 4K7
C3 7/50p
R3 4K7
R6 56H
Q1 BF998
C2 4n7
R2 1K5
R1 10K
C1 4p7F
R.F.

R.V.R. ELETTRONICA Spa — Bill Of Materials — Page 1

Item	Quant.	Reference	Part	Description	Code
1	1	CF1	CF10M7	FILTRO CER. 10.7MHz	
2	1	C1	4p7	COND. CHIP 0805	
3	3	C2,C6,C12	4n7	COND. CHIP 0805	
4	1	C3	7/50p		
5	1	C4	47p	COND. CHIP 0805	
6	1	C5	27p	COND. CHIP 0805	
7	5	C7,C15,C16,C17, C18	.1u	COND. CHIP 0805	
8	2	C8,C10	270p	COND. CHIP 0805	
9	2	C9,C11	10n	COND. CHIP 0805	
10	2	C13,C14	100p	COND. CHIP 0805	
11	2	HY1,HY2	MAR6	MODULO IBR. MAR6	
12	1	J2	SMB_CS	CONN.SMB A STAMPATO	
13	2	L1,L2	2u2H	IMPEDENZA SMD 1210	
14	1	Q1	BF998	DG MOSFET SOT143	
15	1	Q2	BFR93A	TRANSISTOR SOT23	
16	1	R1	1K0	RES. SMD 0805 5%	
17	1	R2	1K5	RES. SMD 0805 5%	
18	2	R3,R5	4K7	RES. SMD 0805 5%	
19	4	R4,R6,R7,R12	56H	RES. SMD 0805 5%	
20	3	R8,R13,R15	470	RES. SMD 0805 5%	
21	2	R9,R10	150	RES. SMD 0805 5%	
22	1	R11	*		
23	2	R14,R16	100	RES. SMD 0805 5%	
24	1	R17	27H	RES. SMD 0805 5%	

Pagina lasciata intenzionalmente in bianco

This page was intentionally left blank

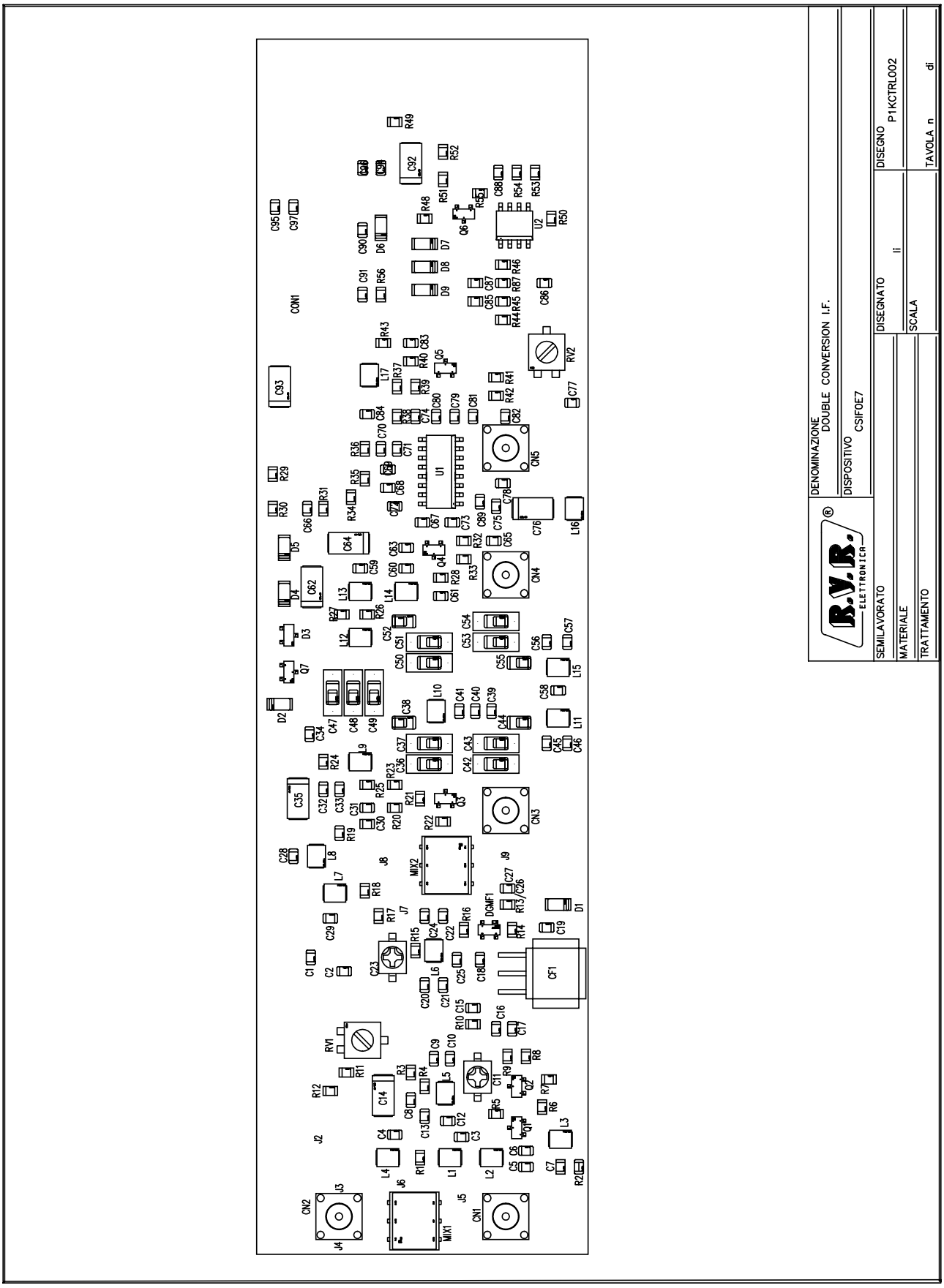
DENOMINAZIONE
DOUBLE CONVERSION I.F.
DISPOSITIVO
CSIFOE7
R.V.R. ELETTRONICA
SEMILAVORATO
DISEGNATO
li
DISEGNO
P1KCTRL002
MATERIALE
SCALA
TRATTAMENTO
TAVOLA n
di

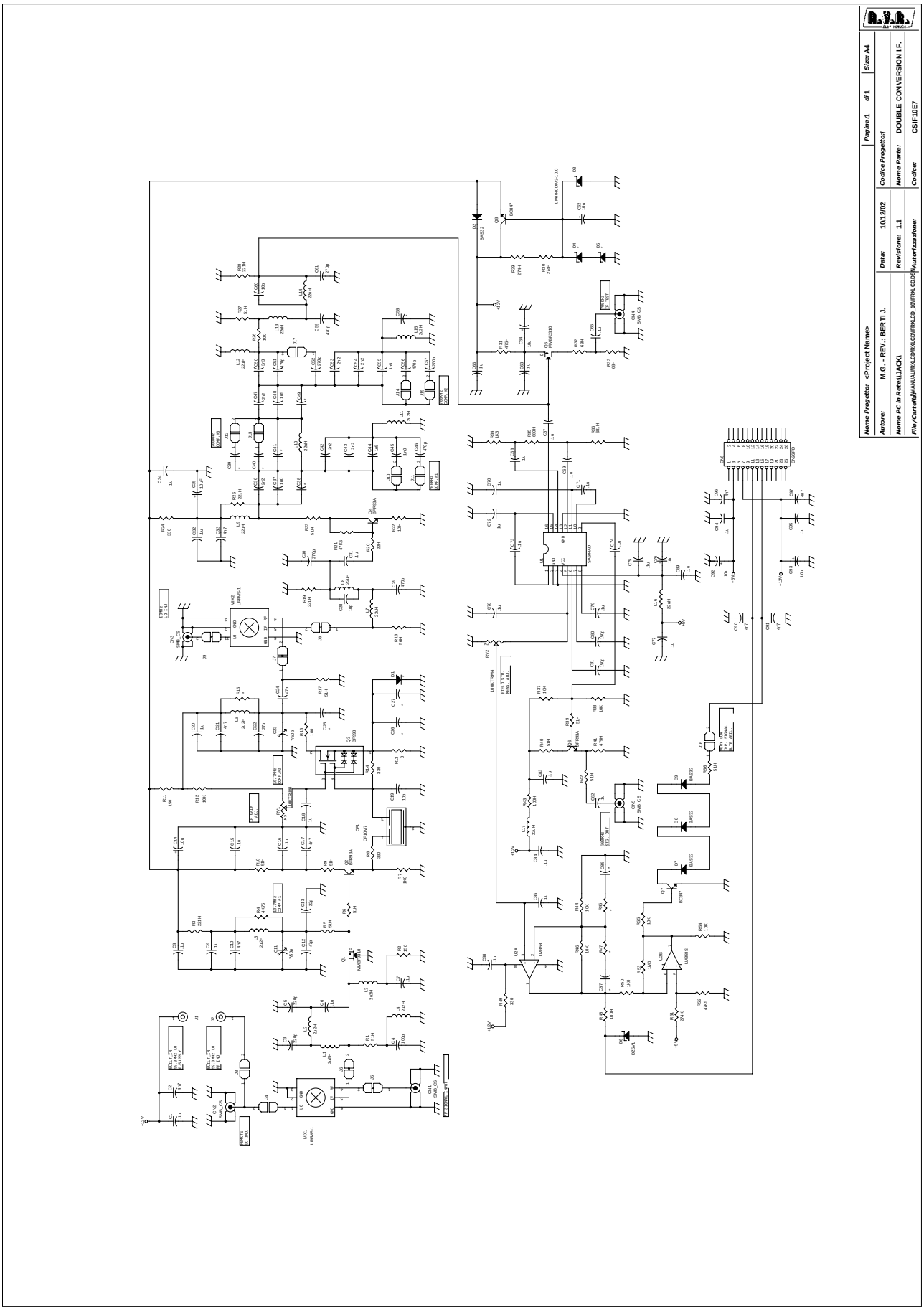
Nome Progetto: <Project Name>
Autore: M.G. - REV.: BERTI J.
Nome PC in Rete\\JACK\
File/Cartella: MANUALI\RXLCD\RXLCD\IFRXLCD_10\IFRXLCD.DSN
Data: 10/12/02
Revisione: 1.1
Autorizzazione:
Pagina:1 di 1
Size: A4
Codice Progetto:
Nome Parte: DOUBLE CONVERSION I.F.
Codice: CSIF10E7

R.V.R. ELETTRONICA CSIF10E7 Bill Of Materials Page 1

Item	Quant.	Reference	Part	Description	Code
1	1	CF1	CF10M7	FILTRO CER. 10.7MHz	
2	5	CN1,CN2,CN3,CN4, CN5	SMB_CS	CONN.SMB A STAMPATO	
3	1	CN6	CN26PD	CONN. M 2X2.54 26PIN	
4	35	C1,C6,C7,C8,C9, C15,C16,C18,C20, C31,C32,C34,C63, C65,C66,C67,C68, C69,C70,C71,C72, C73,C74,C75,C77, C78,C79,C82,C83, C84,C86,C88,C89, C94,C95	.1u	COND. CHIP 0805	
5	9	C2,C10,C17,C21, C33,C90,C91,C96, C97	4n7	COND. CHIP 0805	
6	2	C3,C5	220p	COND. CHIP 0805	
7	1	C4	100p	COND. CHIP 0805	
8	2	C11,C23	7/50p	COMP. SMD 4X4 7/50p	
9	2	C12,C24	47p	COND. CHIP 0805	
10	1	C13	22p	COND. CHIP 0805	
11	7	C14,C35,C62,C64, C76,C92,C93	10u	COND. EL. SMD16V	
12	3	C19,C28,C60	10p	COND. CHIP 0805	
13	1	C22	27p	COND. CHIP 0805	
14	34	J1,D1,J2,J3,J4, D4,J5,D5,J6,J7, J8,J9,J10,J11, J12,J13,J14,R15, J15,J16,J17,C25, C26,C27,C38,C39, C40,C41,R45,R47, C49,C58,C85,C87	*		
15	5	C29,C46,C51,C56, C59	470p	COND. CHIP 0805	
16	4	C30,C52,C57,C61	270p	COND. CHIP 0805	
18	6	C36,C42,C43,C47, C53,C54	2n2	COND. CHIP 0805	
19	2	C45,C37	1n0	COND. CHIP 0805	
20	3	C44,C48,C55	1n5	COND. CHIP 0805	
21	1	C50	3n3	COND. CHIP 0805	
22	2	C80,C81	150p	COND. CHIP 0805	
23	4	D2,D7,D8,D9	BAS32	DIODO SIL. MIMIMELF	
24	1	D3	LM4040-10	D. ZENER PREC. 10V	
25	1	D6	DZ5V1	DIODO ZENER SMD 5V1	
26	8	L1,L2,L3,L4,L5, L5,L6,L11,L15	2u2H	IMPEDENZA SMD 1210	

27	9	L7,L8,L9,L10, L12,L13,L14,L16, L17	22uH	IMPEDENZA SMD 1210
28	2	MIX1,MIX2	LRFMS-1	MIXER SMD 1-500MHz
29	2	Q1,Q5	MMBFJ310	FET SMD SOT23
30	3	Q2,Q4,Q6	BFR93A	TRANSISTOR SOT23
31	1	Q3	BF998	DG MOSFET SOT143
32	2	Q7,Q8	BC847	TRANSISTOR SOT23
33	1	RV1	10KTRIM4	TRIM.4X4mm SMD 10K
34	1	RV2	100KTRIM4	TRIM.4X4mm SMD 100K
35	12	R1,R5,R6,R9,R10, R17,R23,R27,R39, R40,R42,R56	51H	RES. SMD 0805 5%
36	2	R2,R11	150	RES. SMD 0805 5%
37	4	R3,R19,R25,R28	221H	RES. SMD 0805 1%
38	1	R4	4K75	RES. SMD 0805 1%
39	2	R7,R50	1K0	RES. SMD 0805 5%
40	4	R8,R14,R24,R49	330	RES. SMD 0805 5%
41	7	R12,R37,R38,R44, R46,R54,R55	10K	RES. SMD 0805 5%
42	1	R13	0	RES. SMD O OHM
43	2	R16,R26,R43,R48	100	RES. SMD 0805 5%
44	1	R18	56H	RES. SMD 0805 5%
45	1	R20	22H	RES. SMD 0805 5%
46	2	R21,R52	47K5	RES. SMD 0805 1%
47	1	R22	10H	RES. SMD 0805 5%
48	2	R29,R30	274H	RES. SMD 0805 1%
49	2	R31,R41	475H	RES. SMD 0805 1%
50	2	R32,R33	68H	RES. SMD 0805 5%
51	1	R34	1K5	RES. SMD 0805 5%
52	1	R35	680H	RES. SMD 0805 1%
53	1	R36	681H	RES. SMD 0805 1%
55	1	R51	274K	RES. SMD 0805 1%
56	1	R53	1M0	RES. SMD 0805 5%
57	1	U1	SA604AD	CI LIN. SA604SADMD
58	1	U2	LM358S	CI LIN. LM358SMD

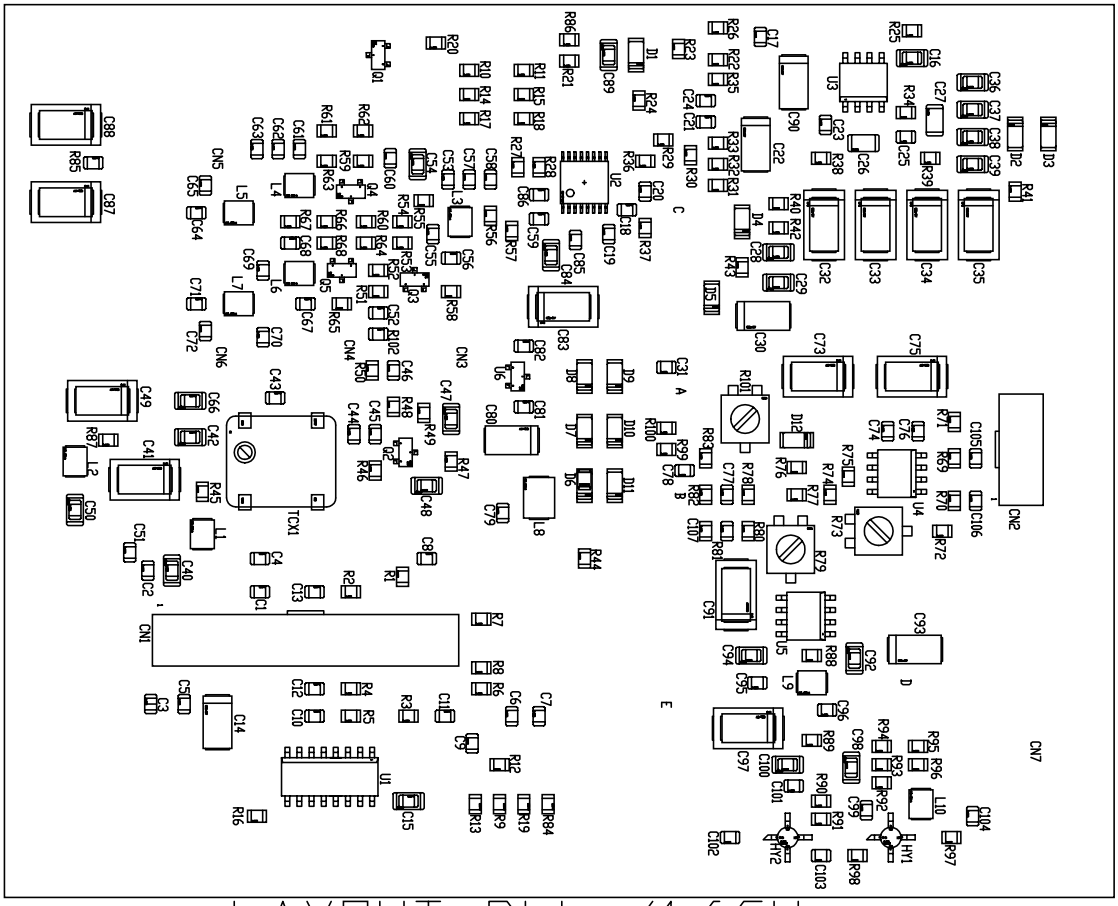

LAYOUT PLL <1.6GHz

R.V.R. ELETTRONICA®	DENOMINAZIONE PLL CON MODULATORE PTRLNV/RXRLNV-LCD	
	DISPOSITIVO CSPLLRTX01	
SEMILAVORATO	DISEGNATO li	DISEGNO
MATERIALE		
TRATTAMENTO	SCALA	TAVOLA n di

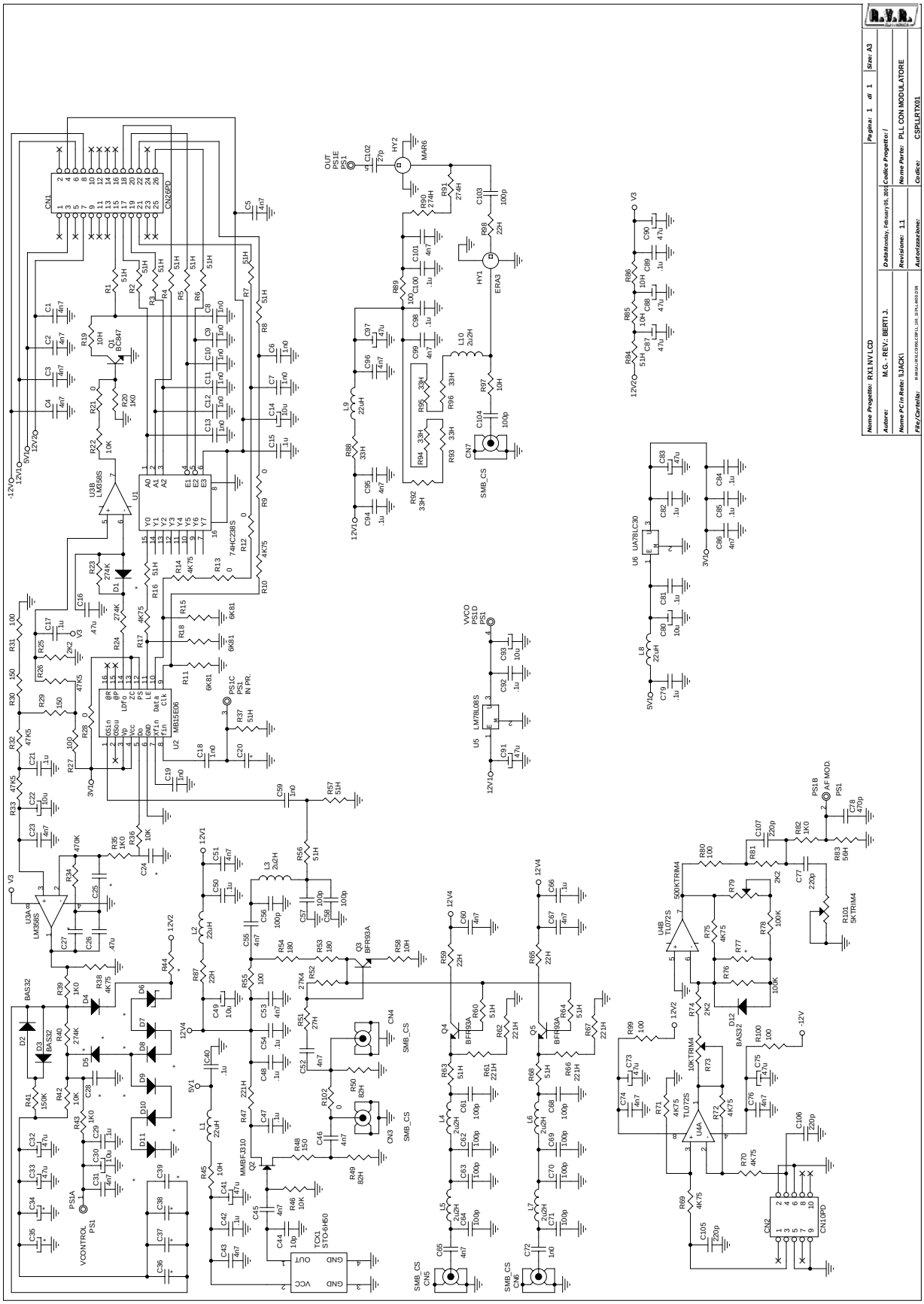
Nome Progetto: RX1 NV LCD
Autore: M.G. - REV.: BERTI J.
Nome PC in Rete: \\JACK\
File/Cartella:
Data: Monday, February 05, 2001
Revisione: 1.1
Autorizzazione:
Codice Progetto: /
Nome Parte: PLL CON MODULATORE
Codice: CSPLLRTX01
Pagina: 1 di 1
Size: A3

R.V.R. ELETTRONICA Spa — Bill Of Materials — Page 1

Item	Quant.	Reference	Part	Description	Code
1	1	CN1	CN26PD	CONN. M 2X2.54 26PIN	CNTMGSEG26P
2	38	CN2,U4,D12,C20, C27,C30,C33,C34, C35,C36,C37,C38, C39,R69,R70,R71, R72,R73,C73,R74, C74,R75,C75,R76, C76,R77,C77,R78, R79,R80,R81,R82, R99,R100,R101, C105,C106,C107	*		
3	5	CN3,CN4,CN5,CN6, CN7	SMB_CS	CONN.SMB A STAMPATO	
4	22	C1,C2,C3,C4,C5, C23,C31,C43,C45, C46,C51,C52,C53, C55,C60,C65,C67, C86,C95,C96,C99, C101	4n7	COND. CHIP 0805	0
5	12	C6,C7,C8,C9,C10, C11,C12,C13,C18, C19,C59,C72	1n0	COND. CHIP 0805	0
6	7	C14,C22,C32,C49, C80,C90,C93	10u	COND. EL. SMD16V	0
7	23	C15,C17,C21,C24, C28,C29,C40,C42, C47,C48,C50,C54, C66,C79,C81,C82, C84,C85,C89,C92, C94,C98,C100	.1u	COND. CHIP 0805	0
8	2	C16,C26	.47u	COND. CHIP 1206	0
9	1	C25	22n	COND. CHIP 0805	0
10	6	C41,C83,C87,C88, C91,C97	47u	COND. EL. SMD16V	0
11	1	C44	10p	COND. CHIP 0805	0
12	13	C56,C57,C58,C61, C62,C63,C64,C68, C69,C70,C71,C103, C104	100p	COND. CHIP 0805	0
13	1	C78	470p	COND. CHIP 0805	0
14	1	C102	27p	COND. CHIP 0805	0
15	10	D1,D2,D3,D4,D5, D7,D8,D9,D10,D11	BAS32	DIODO SIL. MIMIMELF	
16	1	D6	DZ5V1	DIODO ZENER SMD 5V1	
17	1	HY1	SNA186	MODULO IBR. SNA186	
18	1	HY2	MAR6	MODULO IBR. MAR6	
19	4	L1,L2,L8,L9	22uH	IMPEDENZA SMD 1210	
20	6	L3,L4,L5,L6,L7, L10	2u2H	IMPEDENZA SMD 1210	
21	1	Q1	BC847	TRANSISTOR SOT23	

22	1	Q2	MMBFJ310	FET SMD SOT23
23	3	Q3,Q4,Q5	BFR93A	TRANSISTOR SOT23
24	17	R1,R2,R3,R4,R5, R6,R7,R8,R16, R37,R56,R57,R60, R63,R64,R68,R84	51H	RES. SMD 0805 5%
25	6	R9,R12,R13,R21, R28,R83	0	RES. SMD O OHM
26	5	R10,R14,R17,R38, R42	4K75	RES. SMD 0805 1%
27	3	R11,R15,R18	6K81	RES. SMD 0805 1%
28	6	R19,R45,R58,R85, R86,R97	10H	RES. SMD 0805 5%
29	5	R20,R33,R39,R43, R44	1K0	RES. SMD 0805 5%
30	5	R22,R25,R32,R36, R46	10K	RES. SMD 0805 5%
31	2	R23,R24	274K	RES. SMD 0805 1%
32	1	R26	22K	RES. SMD 0805 5%
33	4	R27,R31,R55,R89	100	RES. SMD 0805 5%
34	3	R29,R30,R48	150	RES. SMD 0805 5%
35	1	R34	100K	RES. SMD 0805 5%
36	1	R35	47K5	RES. SMD 0805 1%
37	1	R40	475K	RES. SMD 0805 1%
38	1	R41	150K	RES. SMD 0805 5%
39	5	R47,R61,R62,R66,	221H	RES. SMD 0805 1%
40	2	R49,R50	82H	RES. SMD 0805 5%
41	1	R51	27H	RES. SMD 0805 5%
42	1	R52	27K4	RES. SMD 0805 1%
43	2	R54,R53	180	RES. SMD 0805 5%
44	4	R59,R65,R87,R98	22H	RES. SMD 0805 5%
45	6	R88,R92,R93,R94, R95,R96	33H	RES. SMD 0805 5%
46	2	R91,R90	274H	RES. SMD 0805 1%
47	1	TCX1	STO-6H50	TCXO SMD STO-6H50 10MHz
48	1	U1	74HC238S	CI DIG. 74HC238SMD
49	1	U2	MB15E06	CI DIG. MB15E06 SSOP16
50	1	U3	LM358S	CI LIN. LM358SMD
51	1	U5	LM78L08S	CI LIN.78L08SMD SO8
52	1	U6	UA78LC30	CI LIN.78LC30NTRSOT23-5

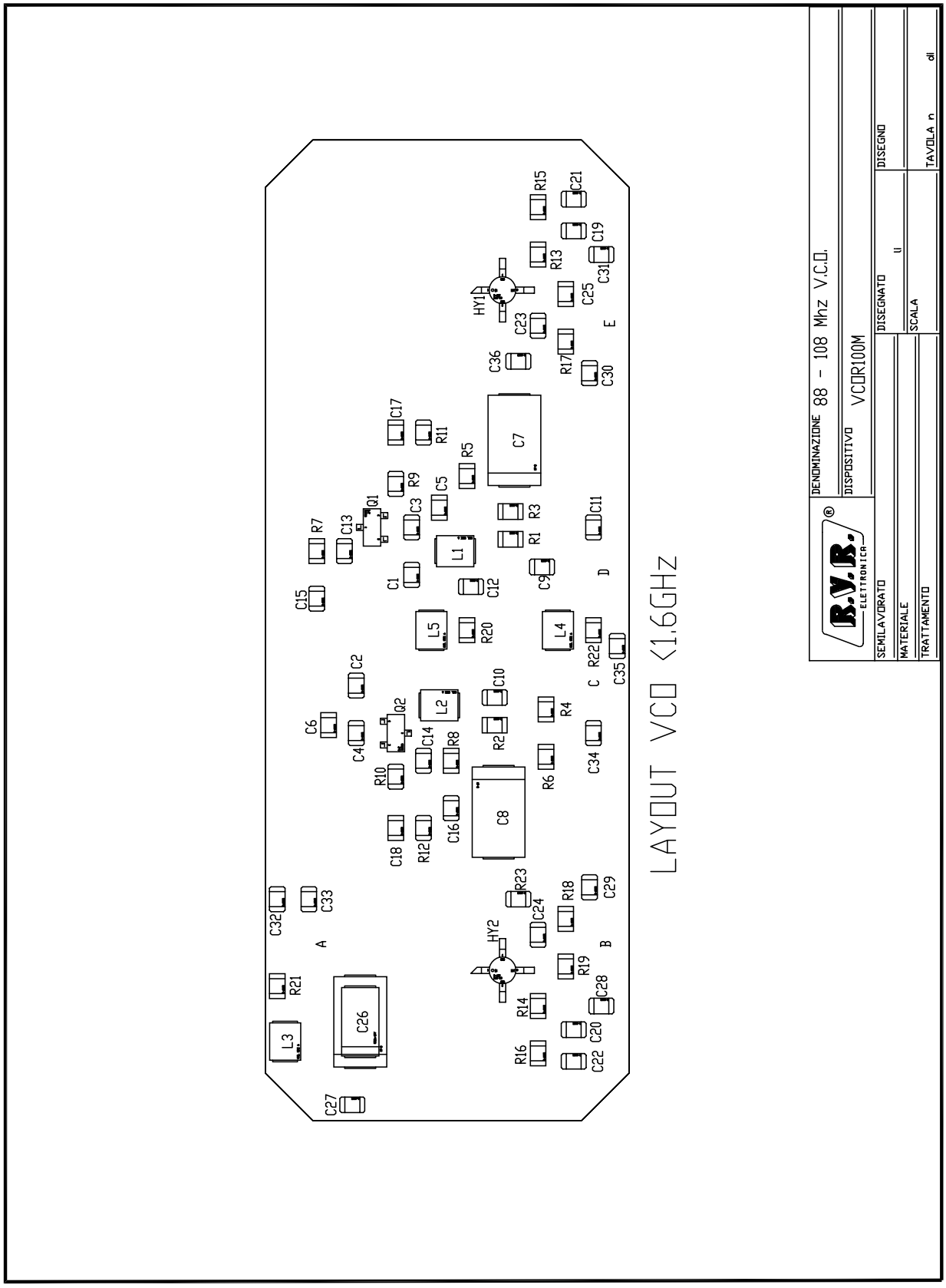
LAYOUT VCO <1,6GHz
DENOMINAZIONE 88 - 108 Mhz V.C.O.
DISPOSITIVO VCO100M
R.V.R. ELETTRONICA
SEMILAVORATO
DISEGNATO
DISEGNO
MATERIALE
SCALA
TRATTAMENTO
TAVOLA n
di

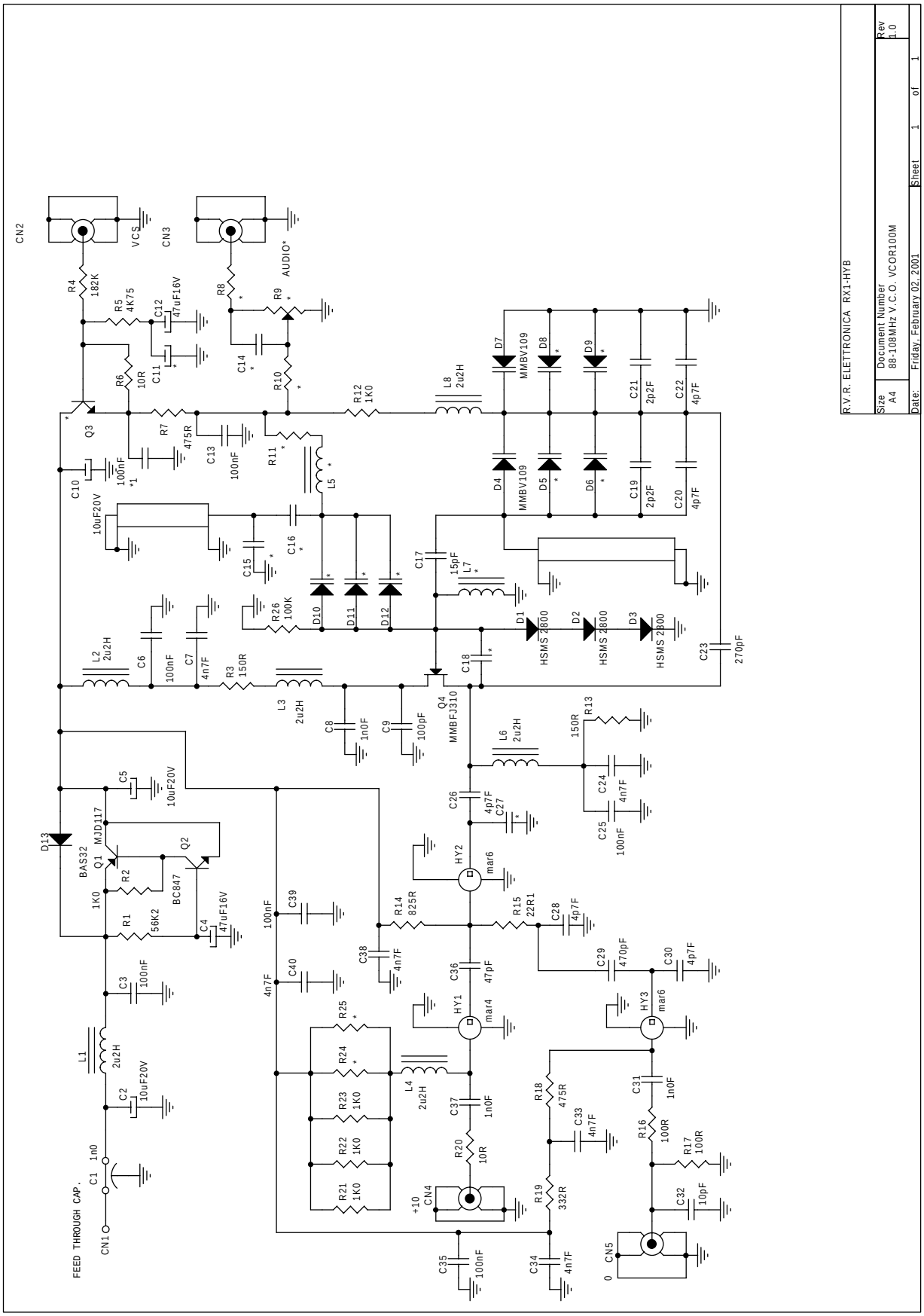
R.V.R. ELETTRONICA RX1-HYB
Size A4
Document Number 88-108MHz V.C.O. VCOR100M
Rev 1.0
Date: Friday, February 02, 2001
Sheet 1 of 1
CN2
VCS
CN3
AUDIO*
Q1 MJD117
Q2 BC847
Q3
Q4 MMBFJ310
D1 HSMS 2800
D2 HSMS 2800
D3 HSMS 2800
D4 MMBV109
D5 MMBV109
D6 MMBV109
D7 MMBV109
D8 MMBV109
D9 MMBV109
D10
D11
D12
D13 BAS32
HY1 mar4
HY2 mar6
HY3 mar6
CN4
CN5
CN1
FEED THROUGH CAP.

CSVCORTXLCD01 VCO RX1/PTRLNV-LCD 100MHz Bill Of Materials Page 1

Item	Quant.	Reference	Part	Description	Code
1	3	C1,C3,C7	47u	COND. EL. SMD16V	
2	2	C2,C31	.1u	COND. CHIP 0805	
3	13	C4,C8,C14,C18, C19,C26,C29,C30, C32,C34,C35,C36, C37	4n7	COND. CHIP 0805	
4	4	C5,C6,C22,C33	470p	COND. CHIP 0805	
5	2	C20,C9	10p	COND. CHIP 0805	
6	6	C10,C11,C15,C21, C23,C27	47p	COND. CHIP 0805	
7	2	C12,C24	220p	COND. CHIP 0805	
8	4	C13,C16,C25,C28	1n0	COND. CHIP 0805	
9	4	D1,D2,D3,D4	MMBV109	DIODO VARICAP SOT23	
10	2	HY1,HY2	MAR6	MODULO IBR. MAR6	
11	2	L1,L4	2u2H	IMPEDENZA SMD 1210	
12	3	L2,L3,L5	22uH	IMPEDENZA SMD 1210	
13	2	Q1,Q2	BFR540	TRANSISTOR SOT23	
14	2	R5,R1	10K	RES. SMD 0805 5%	
15	2	R2,R6	4K75	RES. SMD 0805 1%	
16	3	R3,R7,R23	0	RES. SMD O OHM	
17	2	R4,R15	150	RES. SMD 0805 5%	
18	2	R8,R16	220	RES. SMD 0805 5%	
19	2	R9,R17	22H	RES. SMD 0805 5%	
20	2	R10,R18	10H	RES. SMD 0805 5%	
21	2	R11,R22	51H	RES. SMD 0805 5%	
22	1	R12	22p	COND. CHIP 0805	
23	2	R13,R19	270	RES. SMD 0805 5%	
24	2	R20,R14	100	RES. SMD 0805 5%	
25	1	R21	180	RES. SMD 0805 5%	

Pagina lasciata intenzionalmente in bianco

This page was intentionally left blank

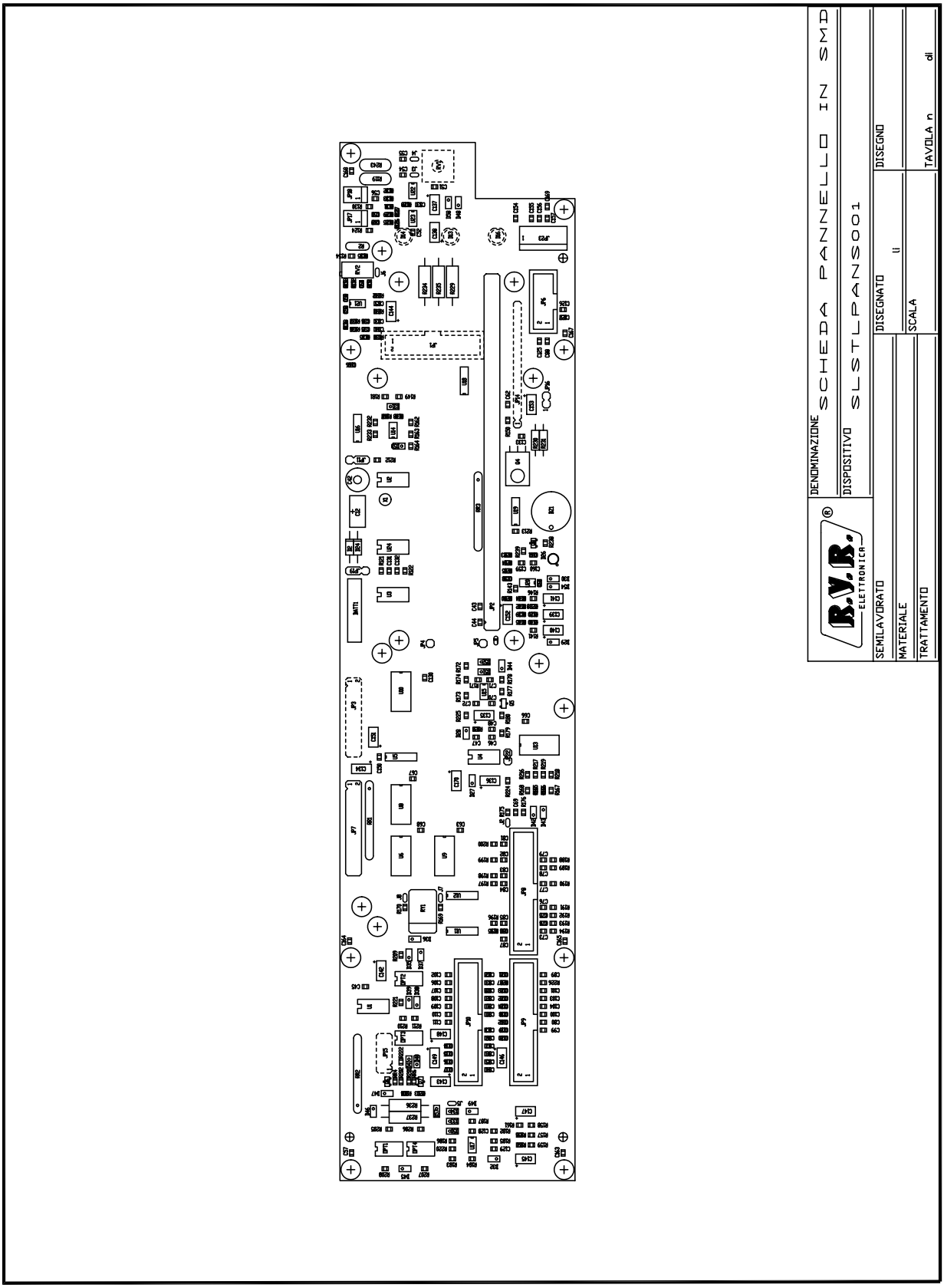
DENOMINAZIONE SCHEDA PANNELLO IN SMD
DISPOSITIVO SLSTLPANS001
R.V.R. ELETTRONICA
SEMILAVORATO
DISEGNATO
DISEGNO
MATERIALE
SCALA
TRATTAMENTO
TAVOLA n
di

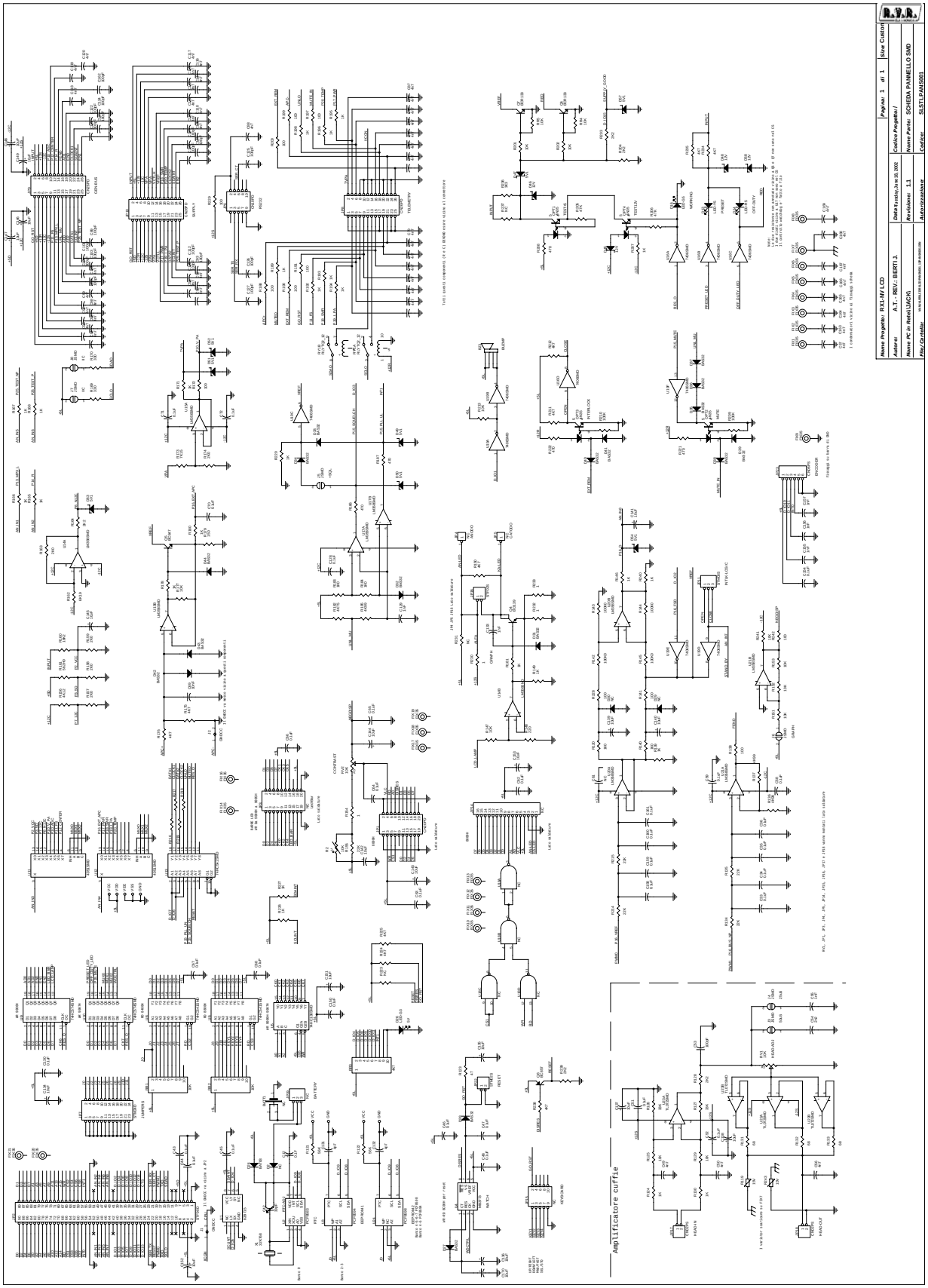
Amplificatore cuffie
Nome Progetto: RX1-NV LCD
Autore: A.T. - REV.: BERTI J.
Nome PC in Rete\\JACK\
Data Ultima Ultimo 18.10.2002
Revisione: 1.1
Autorizzazione
Pagina: 1 di 1
Size Custom
Codice Progetto: /
Nome Parte: SCHEDA PANNELLO SMD
Codice: SLSTLPANS001

Scheda pannello in SMD — Bill Of Materials — Page 1

Item	Quantity	Reference	Part
1	15	BATT1,D2,JP3,JP4,JP5, JP14,JP15,U18,JP19,D29, D30,C61,R223,R231,R237	NC
2	1	BZ1	BUZMP
3	1	C12	0.1F
4	32	C33,C34,C35,C36,C43,C44, C45,C46,C47,C48,C51,C52, C58,C59,C62,C63,C64,C65, C66,C67,C68,C70,C71,C72, C128,C130,C150,C154,C158, C159,C160,C161	0.1uF
5	1	C42	30pF
6	48	C49,C50,C56,C57,C73,C74, C75,C76,C77,C78,C79,C81, C82,C83,C84,C85,C86,C87, C88,C90,C91,C92,C94,C95, C96,C97,C98,C99,C100, C108,C109,C110,C111,C113, C114,C115,C116,C117,C118, C119,C120,C163,C164,C165, C166,C167,C168,C169	4n7
7	20	C53,C80,C89,C93,C101, C102,C103,C104,C105,C106, C107,C112,C121,C122,C123, C124,C125,C126,C127,C162	100pF
8	1	C54	2n2
9	6	C55,C129,C133,C155,C156, C157	1nF
10	1	C69	10nF
11	2	C131,C132	4p7
12	20	C134,C135,C136,C137,C138, C139,C140,C141,C142,C143, C144,C145,C146,C147,C148, C149,C151,C152,C153,C170	10uF
13	1	D13	LED-Y5
14	1	D14	LED-R5
15	1	D16	LED-G5
16	1	D24	BAT83
17	1	D26	LED-G3
18	16	D27,D28,D31,D32,D33,D34, D35,D36,D37,D38,D39,D40, D41,D42,D43,D44	BAS32
19	4	D45,D46,D48,D58	12V
20	8	D47,D49,D50,D51,D52,D53, D54,D57	5V1
21	20	FIX1,FIX2,FIX3,FIX4,FIX5, FIX6,FIX7,FIX8,FIX9, FIX10,FIX11,FIX12,FIX13, FIX14,FIX16,FIX17,FIX18, FIX19,FIX20,FIX21	FIX35
22	1	JP1	CN20PD

23	1	JP2	STF90D
24	1	JP6	CN10PD
25	1	JP7	STM24D
26	3	JP8,JP9,JP10	CN26PD
27	1	JP11	STM03S
28	1	JP16	STF02S
29	2	JP17,JP18	CN02PS
30	1	JP22	STM02S
31	1	JP23	CN06PS
32	2	J1,J2	GNDCC
33	6	J3,J4,J5,J6,J7,J8	JSMD
34	4	OPT1,OPT2,OPT3,OPT4	4N35
35	1	Q4	BD139
36	1	Q5	BC847
37	2	Q7,Q6	BCR133
38	1	Q8	BC857
39	18	RV1,RR1,RV2,RR2,R2,R125, R129,R147,R151,R152,R153, R177,R201,R202,R213,R241, RR4,RR5	10K
40	11	RR3,R150,R175,R176,R211, R212,R224,R225,R234,R235, R238	4K7
41	1	RY1	RLYTQ2_12
42	2	R119,R243	15V
43	4	R120,R140,R183,R184	1K0
44	2	R121,R122	56K
45	5	R123,R216,R217,R218,R219	47
46	25	R124,R130,R139,R146,R149, R165,R166,R167,R168,R171, R178,R180,R181,R189,R192, R193,R194,R195,R196,R198, R207,R220,R226,R227,R240	1K
47	2	R126,R127	33K
48	5	R128,R164,R203,R204,R239	2K2
49	3	R131,R132,R133	68
50	5	R134,R135,R155,R214,R215	22K
51	3	R136,R137,R185	4K99
52	12	R138,R141,R172,R188,R190, R191,R197,R199,R200,R228, R229,R242	100
53	4	R142,R143,R144,R145	100K0
54	1	R148	220

55	4	R154,R230,R232,R233	1
56	1	R156	4K12
57	5	R157,R158,R159,R163,R174	2K0
58	1	R160	18K2
59	1	R161	562H0
60	1	R162	6K19
61	2	R169,R170	330
62	1	R173	7K15
63	1	R179	150
64	1	R182	4K75
65	5	R186,R187,R208,R221,R222	470
66	2	R209,R210	100K
67	1	R236	3K3
68	1	U1	82B715
69	1	U2	PCF8583
70	1	U3	PCF8594
71	1	U4	MB3773
72	1	U5	74HC138SMD
73	3	U6,U8,U13	74HC541SMD
74	2	U9,U10	74HC574SMD
75	2	U11,U12	4051SMD
76	5	U14,U15,U17,U20,U21	LM358SMD
77	2	U16,U19	7406SMD
78	2	U23,U22	TL072SMD
79	1	U24	PCF8598
80	1	X1	32K768
81	2	R205,R206	47K

Pagina lasciata intenzionalmente in bianco

This page was intentionally left blank

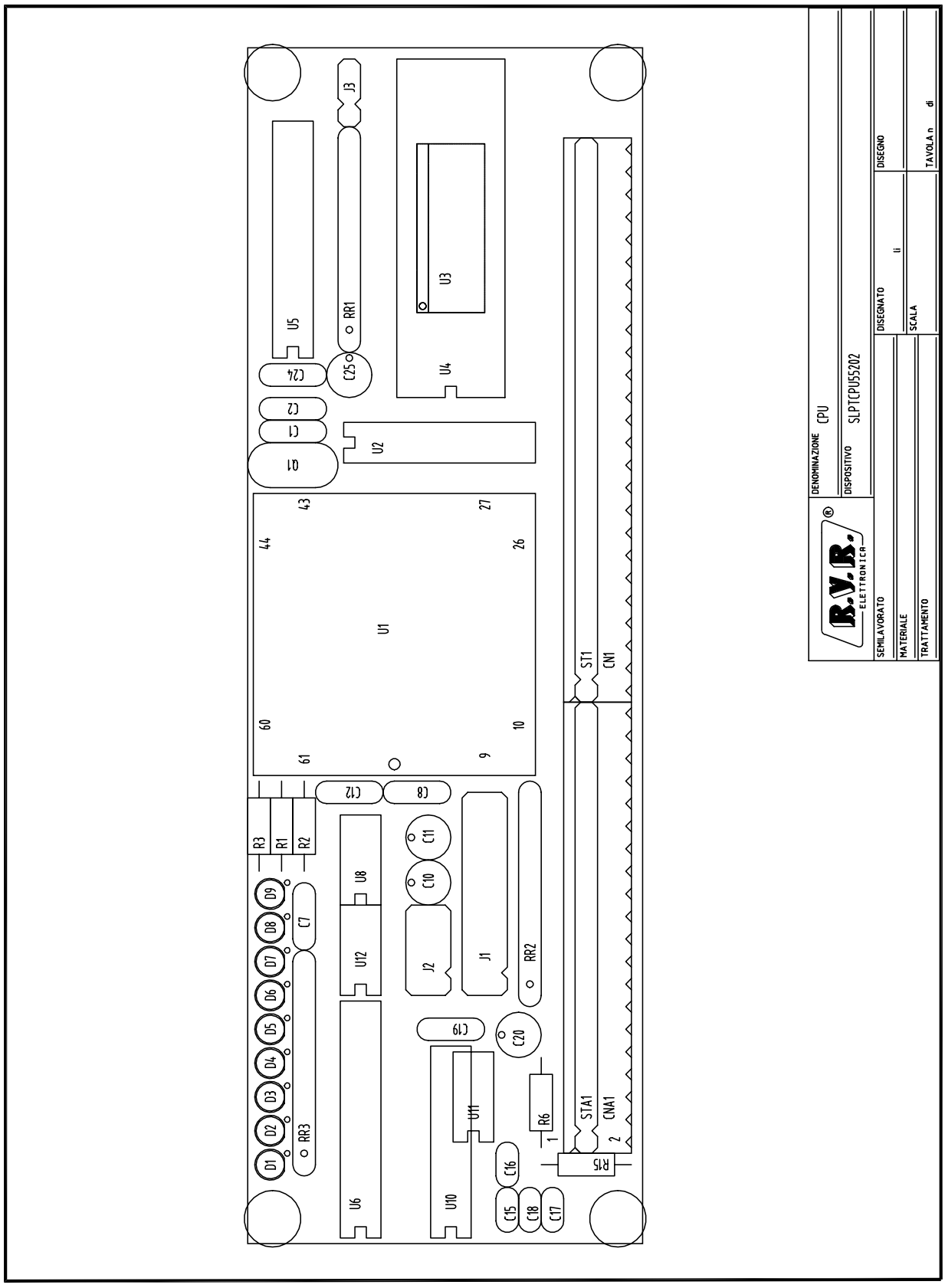
DENOMINAZIONE CPU
DISPOSITIVO SLPTCPU55202
DISEGNATO
DISEGNO
SCALA
TAVOLA n di
SEMILAVORATO
MATERIALE
TRATTAMENTO
R.V.R. ELETTRONICA
J3
U5
RR1
U3
U4
C25
C24
C2
C1
Q1
U2
U1
ST1
CN1
R3
R1
R2
C12
C8
C11
C10
U8
U12
J2
J1
RR2
C7
D9
D8
D7
D6
D5
D4
D3
D2
D1
RR3
U6
C19
C20
U11
U10
R6
STA1
CNA1
R15
C16
C15
C18
C17

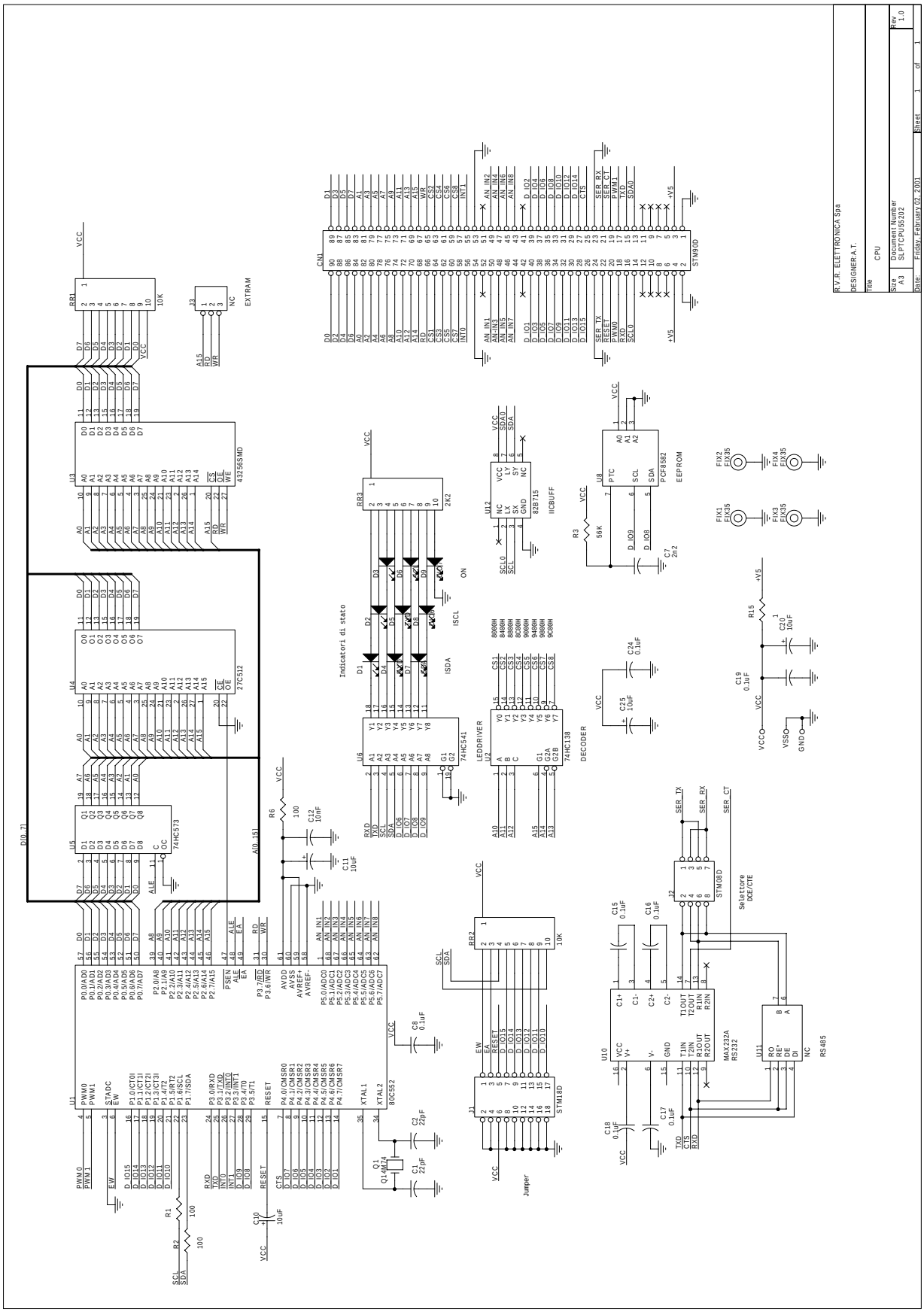

CPU552 Bill Of Materials Page 1

Item	Quantity	Reference	Part
1	1	CN1	STM90D
2	2	C1,C2	22pF
3	1	C7	2n2
4	7	C8,C15,C16,C17,C18,C19, C24	0.1uF
5	4	C10,C11,C20,C25	10uF
6	1	C12	10nF
7	9	D1,D2,D3,D4,D5,D6,D7,D8, D9	LED-R3
8	4	FIX1,FIX2,FIX3,FIX4	FIX35
9	1	J1	STM18D
10	1	J2	STM08D
11	2	J3,U11	NC
12	1	Q1	Q14M74
13	2	RR2,RR1	10K
14	1	RR3	2K2
15	3	R1,R2,R6	100
16	1	R3	56K
17	1	R15	1
18	1	U1	80C552
19	1	U2	74HC138
20	1	U3	43256SMD
21	1	U4	27C512
22	1	U5	74HC573
23	1	U6	74HC541
24	1	U8	PCF8582
25	1	U10	MAX232A
26	1	U12	82B715

Pagina lasciata intenzionalmente in bianco

This page was intentionally left blank

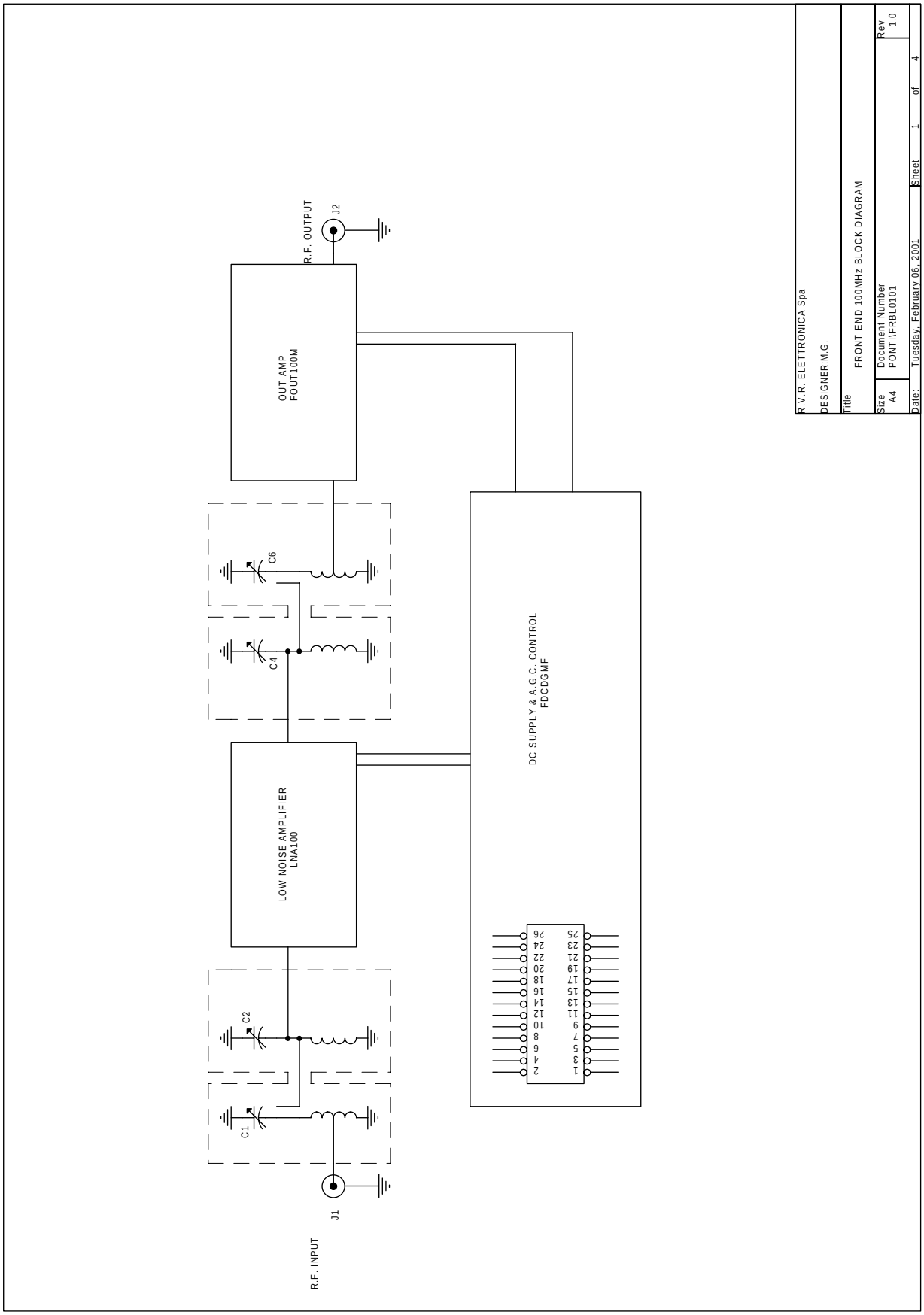
R.V.R. ELETTRONICA Spa
DESIGNER:M.G.
Title
FRONT END 100MHz BLOCK DIAGRAM
Size
A4
Document Number
PONTI\FRBL0101
Rev.
1.0
Date:
Tuesday, February 06, 2001
Sheet
1
of
4
R.F. OUTPUT
J2
OUT AMP
FOUT100M
C6
C4
LOW NOISE AMPLIFIER
LNA100
C2
C1
J1
R.F. INPUT
DC SUPPLY & A.G.C. CONTROL
FDCDGMF
1
2
3
4
5
6
7
8
9
10
11
12
13
14
15
16
17
18
19
20
21
22
23
24
25
26

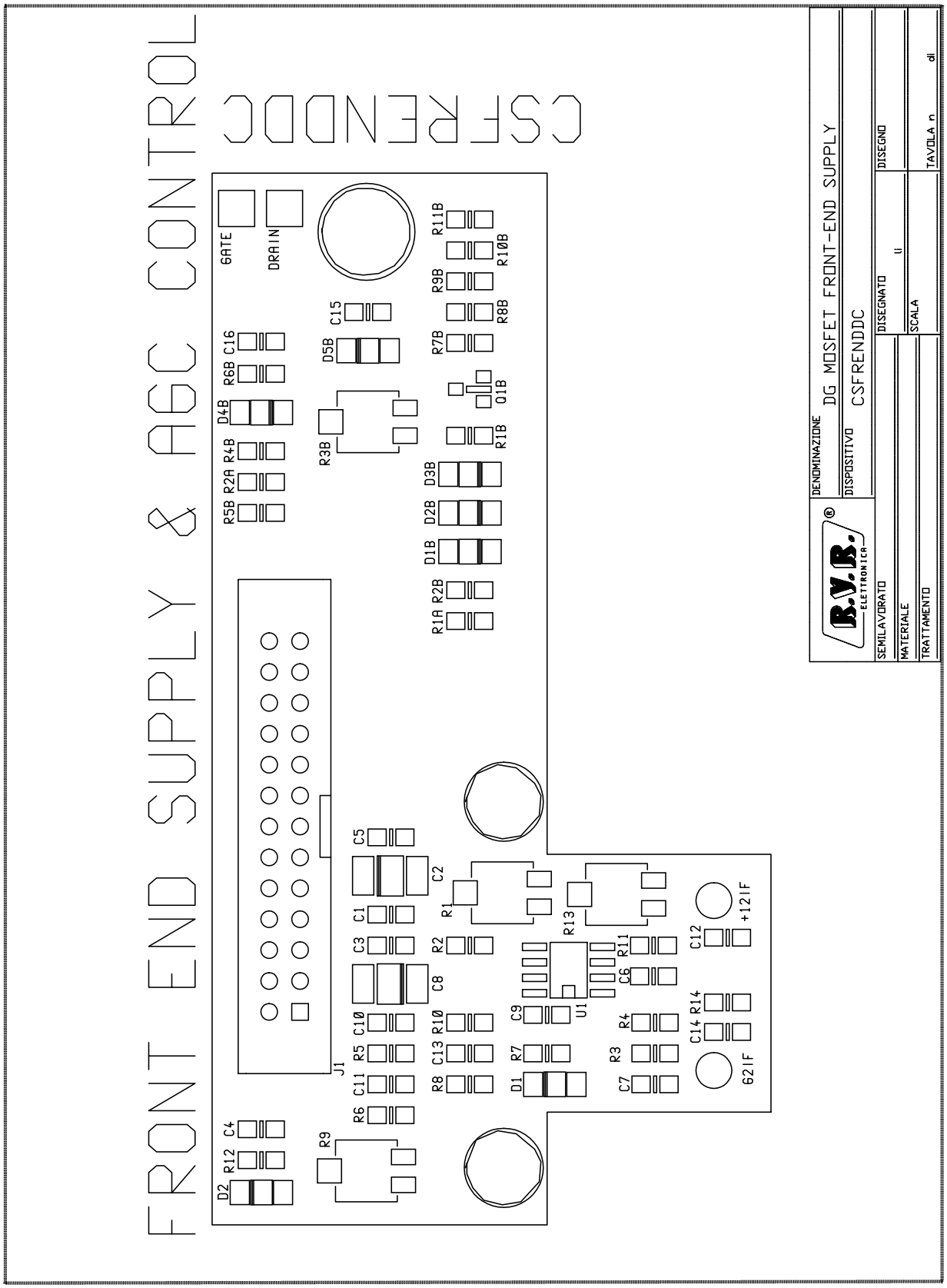
FRONT END SUPPLY & AGC CONTROL
CSFRENDDC
GATE
DRAIN
J1
+12IF
62IF
DENOMINAZIONE
DG MOSFET FRONT-END SUPPLY
DISPOSITIVO
CSFRENDDC
SEMILAVORATO
MATERIALE
TRATTAMENTO
DISEGNATO
SCALA
DISEGNO
TAVOLA n
di

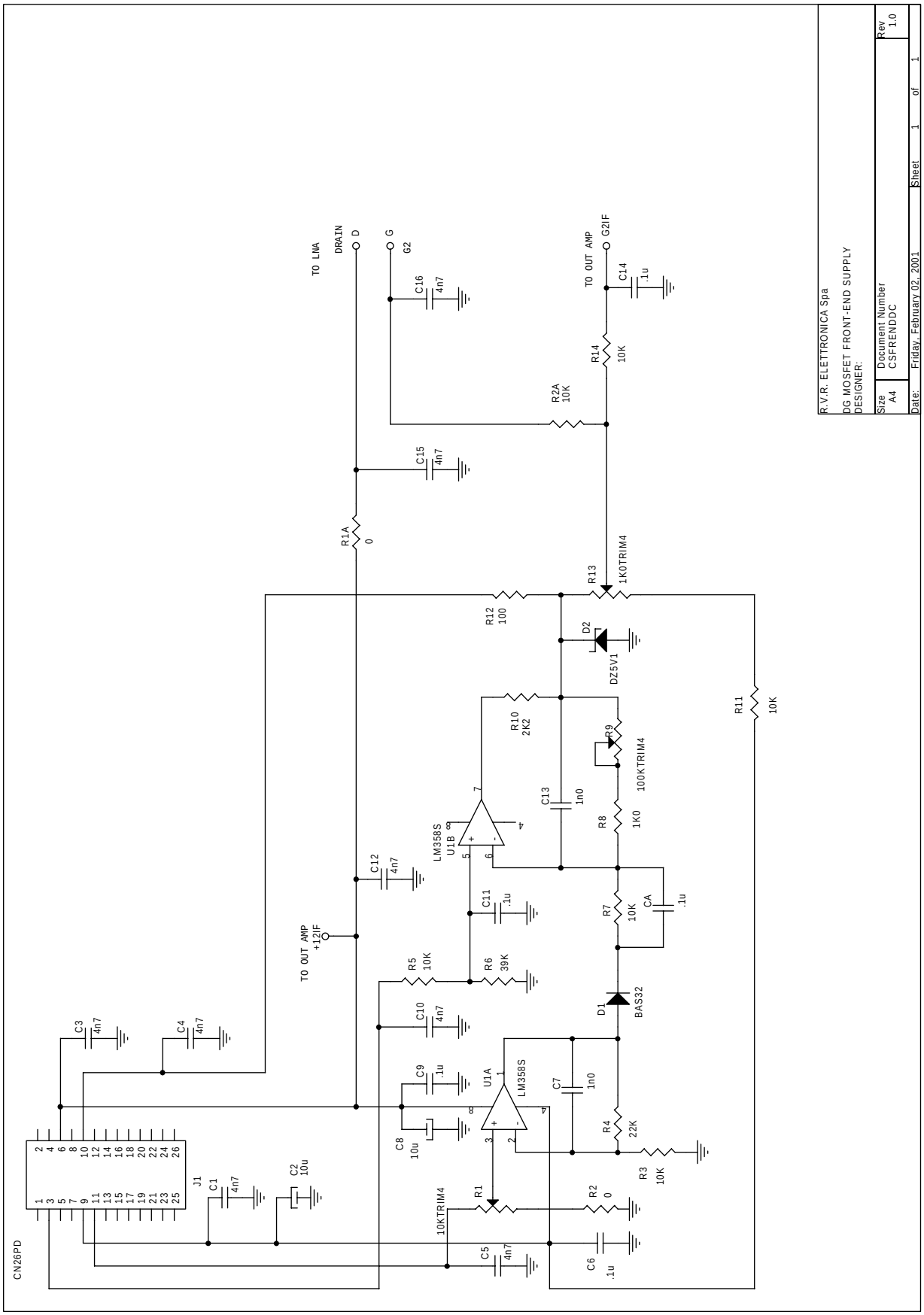
R.V.R. ELETTRONICA Spa
DG MOSFET FRONT-END SUPPLY
DESIGNER:
Size A4
Document Number CSFRENDDC
Rev 1.0
Date: Friday, February 02, 2001
Sheet 1 of 1
TO LNA
DRAIN
D
G
G2
TO OUT AMP
G2IF
C16 4n7
C14 .1u
R14 10K
R2A 10K
C15 4n7
R1A 0
R13 1K0TRIM4
R12 100
D2
DZ5V1
R11 10K
R10 2K2
R9 100KTRIM4
C13 1n0
R8 1K0
LM358S U1B
C12 4n7
C11 .1u
R7 10K
CA .1u
TO OUT AMP +12IF
R5 10K
R6 39K
D1 BAS32
C10 4n7
C3 4n7
C4 4n7
C9 .1u
U1A LM358S
C7 1n0
C8 10u
R4 22K
R3 10K
J1
C1 4n7
C2 10u
R1 10KTRIM4
R2 0
C5 4n7
C6 .1u
CN26PD

CSFRENDDC DG MOSFET VERSION Bill Of Materials Page 1

Item	Quant.	Reference	Part	Description	Code
1	5	C6,C9,C11,C14,CA	.1u	COND. CHIP 0805	
2	8	C1,C3,C4,C5,C10, C12,C15,C16	4n7	COND. CHIP 0805	
3	2	C8,C2	10u	COND. EL. SMD16V	
4	2	C7,C13	1n0	COND. CHIP 0805	
5	1	D1	BAS32	DIODO SIL. MIMIMELF	
6	1	D2	DZ5V1	DIODO ZENER SMD 5V1	
7	1	J1	CN26PD	CONN. M 2X2.54 26PIN	
8	1	R1	10KTRIM4	TRIM.4X4mm SMD 10K	
9	2	R1A,R2	0	RES. SMD O OHM	
10	6	R2A,R3,R5,R7, R11,R14	10K	RES. SMD 0805 5%	
11	1	R4	22K	RES. SMD 0805 5%	
12	1	R6	39K	RES. SMD 0805 5%	
13	1	R8	1K0	RES. SMD 0805 5%	
14	1	R9	100KTRIM4	TRIM.4X4mm SMD 100K	
15	1	R10	2K2	RES. SMD 0805 5%	
16	1	R12	100	RES. SMD 0805 5%	
17	1	R13	1KTRIM4	TRIM.4X4mm SMD 1K	
18	1	U1	LM358S	CI LIN. LM358SMD	

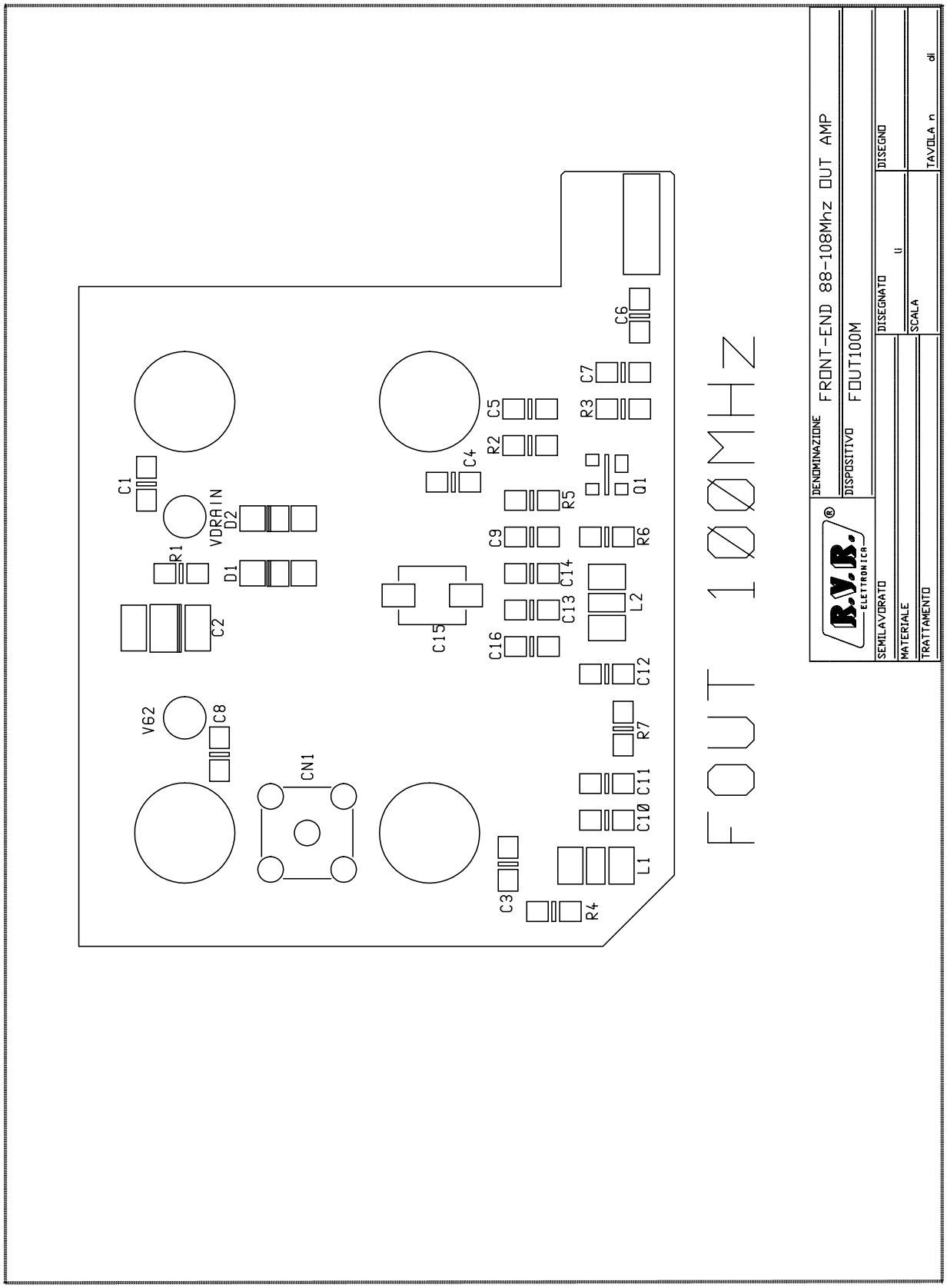
FOUT 100MHz
DENOMINAZIONE FRONT-END 88-108Mhz OUT AMP
DISPOSITIVO FOUT100M
B.V.R. ELETTRONICA
DISEGNATO
DISEGNO
SEMILAVORATO
SCALA
MATERIALE
TAVOLA n
TRATTAMENTO
C1
VDRAIN
D2
R1
D1
C2
V62
C8
CN1
C3
R4
L1
C10
C11
R7
C12
L2
C13
C14
C16
C15
C9
R6
R5
Q1
C4
R2
C5
R3
C7
C6

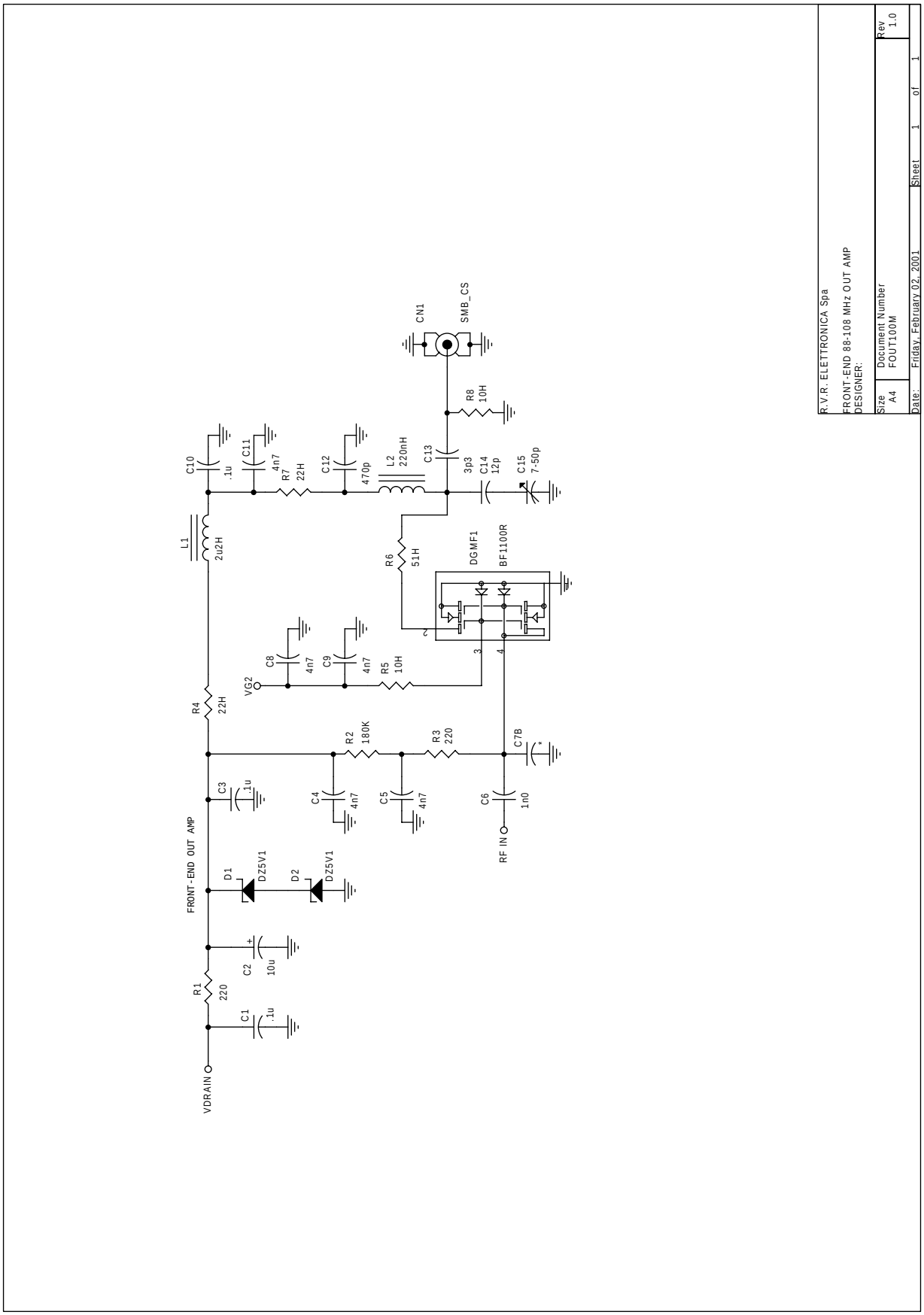
R.V.R. ELETTRONICA Spa
FRONT-END 88-108 MHz OUT AMP
DESIGNER:
Size A4
Document Number FOUT100M
Rev 1.0
Date: Friday, February 02, 2001
Sheet 1 of 1
CN1
SMB_CS
R8 10H
C10 .1u
C11 4n7
R7 22H
C12 470p
L2 220nH
C13 3p3
C14 12p
C15 7-50p
L1 2u2H
R6 51H
DGMF1
BF1100R
C8 4n7
C9 4n7
R5 10H
VG2
R4 22H
R2 180K
R3 220
C7B *
C3 .1u
C4 4n7
C5 4n7
C6 1n0
RF IN
FRONT-END OUT AMP
D1 DZ5V1
D2 DZ5V1
C2 10u
R1 220
C1 .1u
VDRAIN

FOUT100M Bill Of Materials Page 1

Item	Quant.	Reference	Part	Description	Code
1	1	CN1	SMB_CS	CONN.SMB A STAMPATO	
2	3	C1,C3,C10	.1u	COND. CHIP 0805	
3	1	C2	10u	COND. EL. SMD16V	
4	5	C4,C5,C8,C9,C11	4n7	COND. CHIP 0805	
5	1	C6	1n0	COND. CHIP 0805	
6	1	C7B	*		
7	1	C12	470p	COND. CHIP 0805	
8	1	C13	3p3	COND. CHIP 0805	
9	1	C14	12p	COND. CHIP 0805	
10	1	C15	7-50p		
11	1	DGMF1	BF1100R	DG MOSFET SOT143R	
12	2	D1,D2	DZ5V1	DIODO ZENER SMD 5V1	
13	1	L1	2u2H	IMPEDENZA SMD 1210	
14	1	L2	220nH	IMPEDENZA SMD 1210	
15	2	R3,R1	220	RES. SMD 0805 5%	
16	1	R2	180K	RES. SMD 0805 5%	
17	2	R4,R7	22H	RES. SMD 0805 5%	
18	2	R5,R8	10H	RES. SMD 0805 5%	
19	1	R6	51H	RES. SMD 0805 5%	

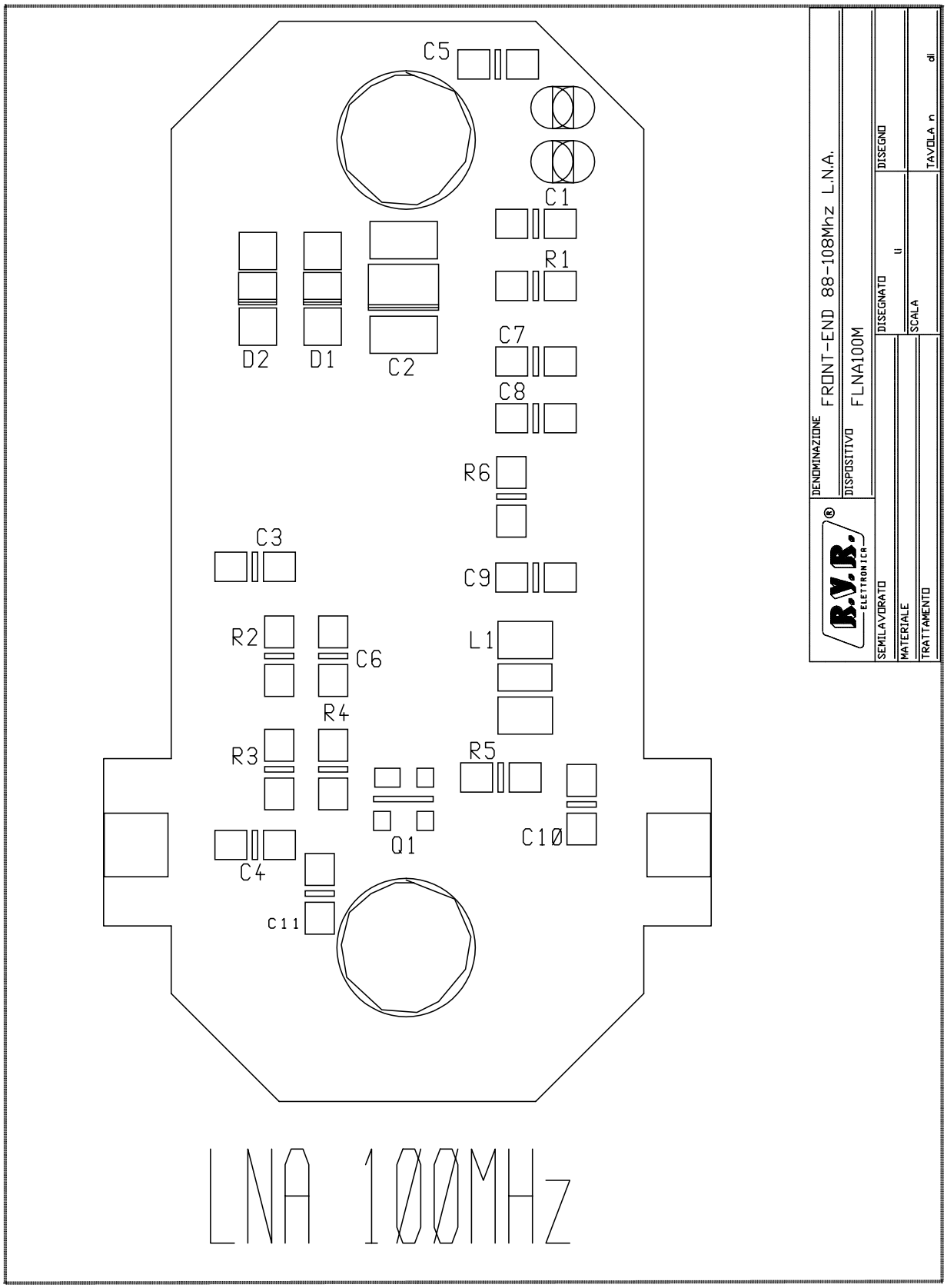
C5
C1
R1
D2
D1
C2
C7
C8
R6
C3
C9
R2
C6
L1
R4
R3
R5
Q1
C10
C4
C11
DENOMINAZIONE
FRONT-END 88-108Mhz L.N.A.
DISPOSITIVO
FLNA100M
DISEGNATO
DISEGNO
SCALA
TAVOLA n
di
SEMILAVORATO
MATERIALE
TRATTAMENTO
LNA 100MHz

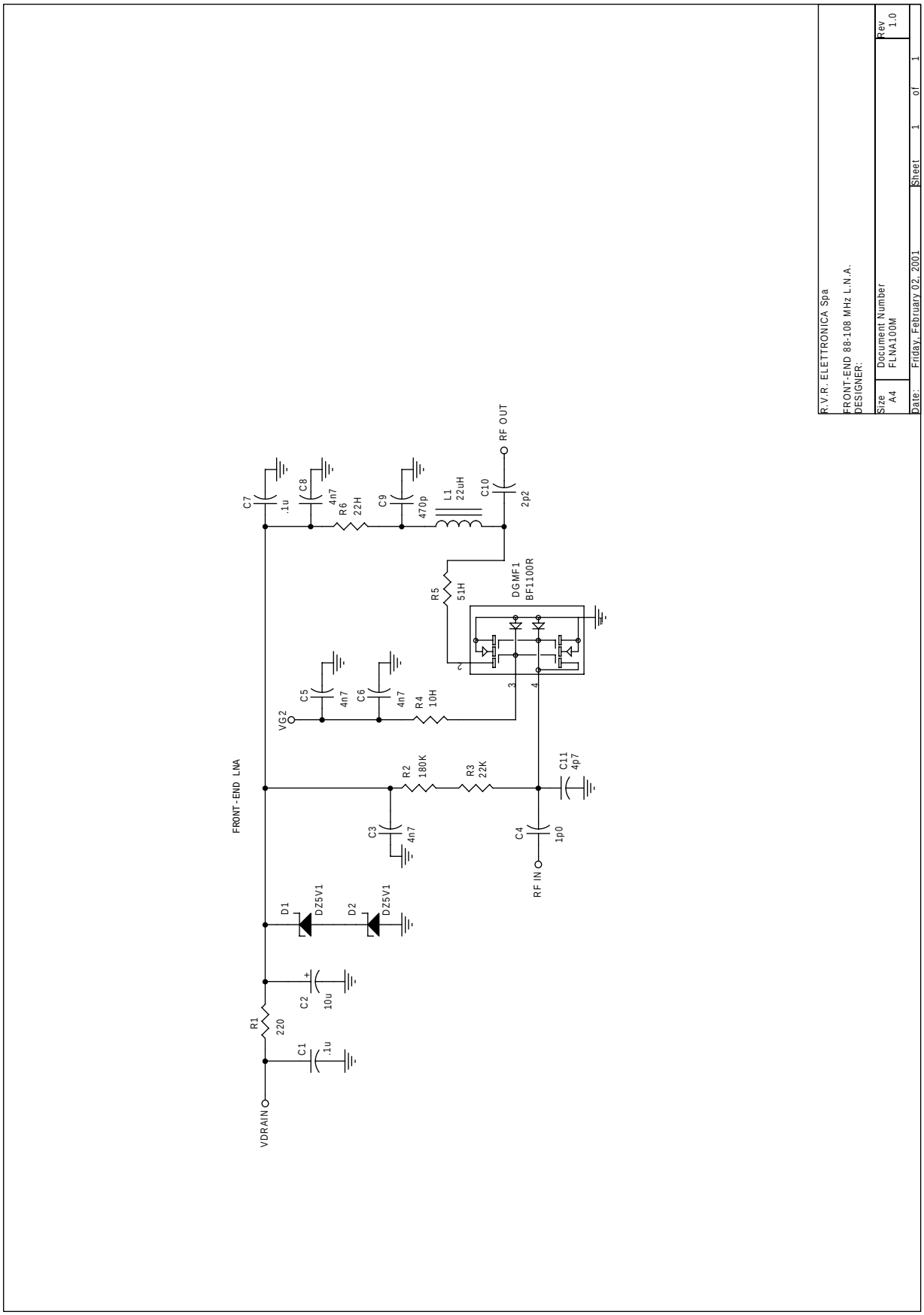
R.V.R. ELETTRONICA Spa
FRONT-END 88-108 MHz L.N.A.
DESIGNER:
Size A4
Document Number FLNA100M
Rev 1.0
Date: Friday, February 02, 2001
Sheet 1 of 1
RF OUT
RF IN
VDRAIN
VG2
FRONT-END LNA
C7 .1u
C8 4n7
R6 22H
C9 470p
L1 22uH
C10 2p2
R5 51H
DGMF1 BF1100R
C5 4n7
C6 4n7
R4 10H
R2 180K
R3 22K
C11 4p7
C3 4n7
C4 1p0
D1 DZ5V1
D2 DZ5V1
C2 10u
R1 220
C1 .1u

FLNA100M Bill Of Materials Page 1

Item	Quant.	Reference	Part	Description	Code
1	2	C1,C7	.1u	COND. CHIP 0805	
2	1	C2	10u	COND. EL. SMD16V	
3	4	C3,C5,C6,C8	4n7	COND. CHIP 0805	
4	1	C4	1p0	COND. CHIP 0805	
5	1	C9	470p	COND. CHIP 0805	
6	1	C10	2p2	COND. CHIP 0805	
7	1	C11	4p7	COND. CHIP 0805	
8	1	DGMF1	BF1100R	DG MOSFET SOT143R	
9	2	D1,D2	DZ5V1	DIODO ZENER SMD 5V1	
10	1	L1	22uH	IMPEDENZA SMD 1210	
11	1	R1	220	RES. SMD 0805 5%	
12	1	R2	180K	RES. SMD 0805 5%	
13	1	R3	22K	RES. SMD 0805 5%	
14	1	R4	10H	RES. SMD 0805 5%	
15	1	R5	51H	RES. SMD 0805 5%	
16	1	R6	22H	RES. SMD 0805 5%	

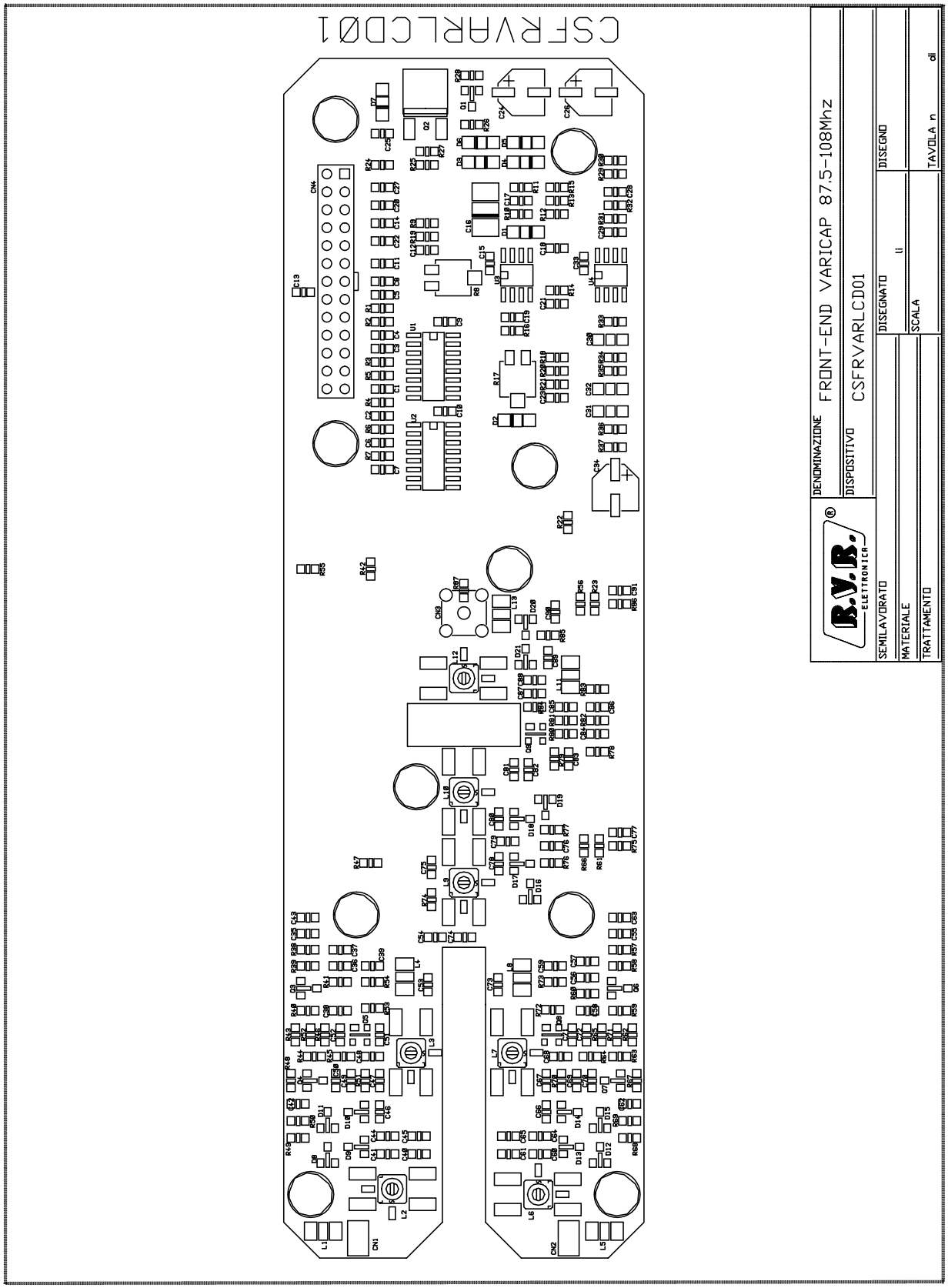
CSFRVARLCD01
DENOMINAZIONE FRONT-END VARICAP 87.5-108Mhz
DISPOSITIVO CSFRVARLCD01
R.V.R. ELETTRONICA
SEMILAVORATO
MATERIALE
TRATTAMENTO
DISEGNATO
SCALA
DISEGNO
TAVOLA n
di

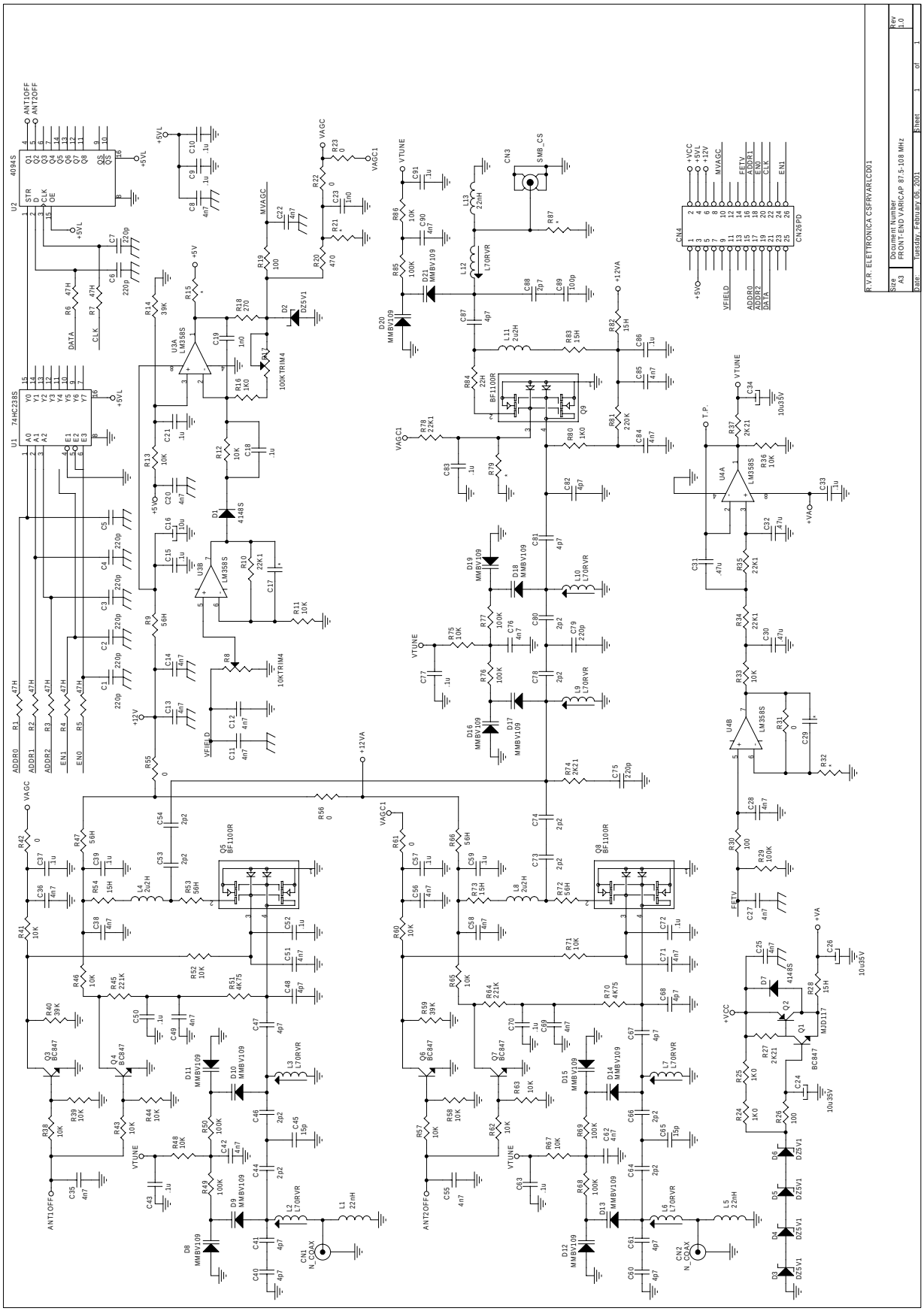
R.V.R. ELETTRONICA CSFRVARLCD01
Size A3
Document Number FRONT-END VARICAP 87.5-108 MHz
Rev 1.0
Date: Tuesday, February 06, 2001
Sheet 1 of 1

FRONT-END VARICAP 87.5-108 MHz Bill Of Materials Page 1

Item	Quant.	Reference	Part	Description	Code
1	2	CN1,CN2	N_COAX	CONN. N A TELAIO	
2	1	CN3	SMB_CS	CONN.SMB A STAMPATO	
3	1	CN4	CN26PD	CONN. M 2X2.54 26PIN	
4	9	C1,C2,C3,C4,C5, C6,C7,C75,C79	220p	COND. CHIP 0805	
5	26	C8,C11,C12,C13, C14,C20,C22,C25, C27,C28,C35,C36, C38,C42,C49,C51, C55,C56,C58,C62, C69,C71,C76,C84, C85,C90	4n7	COND. CHIP 0805	
6	20	C9,C10,C15,C18, C21,C33,C37,C39, C43,C50,C52,C57, C59,C63,C70,C72, C77,C83,C86,C91	.1u	COND. CHIP 0805	
7	1	C16	10u	COND. EL. SMD16V	
8	7	R15,C17,R21,C29, R32,R79,R87	*		
9	2	C19,C23	1n0	COND. CHIP 0805	
10	3	C24,C26,C34	10u35V	COND. EL. VER SMD 35V	
11	3	C30,C31,C32	.47u	COND. CHIP 1206	
12	11	C40,C41,C47,C48, C60,C61,C67,C68, C81,C82,C87	4p7	COND. CHIP 0805	
13	10	C44,C46,C53,C54, C64,C66,C73,C74, C78,C80	2p2	COND. CHIP 0805	
14	2	C45,C65	15p	COND. CHIP 0805	
15	1	C88	2p7	COND. CHIP 0805	
16	1	C89	100p	COND. CHIP 0805	
17	2	D7,D1	4148S	DIODO SIL. MINIMELF	
18	5	D2,D3,D4,D5,D6	DZ5V1	DIODO ZENER SMD 5V1	
19	14	D8,D9,D10,D11, D12,D13,D14,D15, D16,D17,D18,D19, D20,D21	MMBV109	DIODO VARICAP SOT23	
20	3	L1,L5,L13	22nH	IMPEDENZA SMD 1210	
21	7	L2,L3,L6,L7,L9, L10,L12	L70RVR	BOBINA 70 MHz	
22	3	L4,L8,L11	2u2H	IMPEDENZA SMD 1210	
23	5	Q1,Q3,Q4,Q6,Q7	BC847	TRANSISTOR SOT23	
24	1	Q2	MJD117	TRANSISTOR 369A	
25	3	Q5,Q8,Q9	BF1100R	DG MOSFET SOT143R	
26	7	R1,R2,R3,R4,R5, R6,R7	47H	RES. SMD 0805 5%	
27	1	R8	10KTRIM4	TRIM.4X4mm SMD 10K	
28	5	R9,R47,R53,R66, R72	56H	RES. SMD 0805 5%	
29	4	R10,R34,R35,R78	22K1	RES. SMD 0805 1%	
30	23	R11,R12,R13,R33, R36,R38,R39,R41, R43,R44,R46,R48, R52,R57,R58,R60, R62,R63,R65,R67, R71,R75,R86	10K	RES. SMD 0805 5%	
31	3	R14,R40,R59	39K	RES. SMD 0805 5%	
32	4	R16,R24,R25,R80	1K0	RES. SMD 0805 5%	
33	1	R17	100KTRIM4	TRIM.4X4mm SMD 100K	
34	1	R18	270	RES. SMD 0805 5%	
35	3	R19,R26,R30	100	RES. SMD 0805 5%	
36	1	R20	470	RES. SMD 0805 5%	
37	7	R22,R23,R31,R42, R55,R56,R61	0	RES. SMD O OHM	
38	3	R27,R37,R74	2K21	RES. SMD 0805 1%	
39	5	R28,R54,R73,R82, R83	15H	RES. SMD 0805 5%	
40	8	R29,R49,R50,R68, R69,R76,R77,R85	100K	RES. SMD 0805 5%	
41	2	R45,R64	221K	RES. SMD 0805 1%	

42	2	R51,R70	4K75	RES. SMD 0805 1%
43	1	R81	220K	RES. SMD 0805 5%
44	1	R84	22H	RES. SMD 0805 5%
45	1	U1	74HC238S	CI DIG. 74HC238SMD
46	1	U2	4094S	CI DIG. 4094SMD
47	2	U3,U4	LM358S	CI LIN. LM358SMD

Appendix B Piani di montaggio, schemi elettrici, liste componenti modificati per la versione 76-90MHz / *Component layouts, schematics, bills of material modified for 76-90MHz version*

Questa parte del manuale contiene i dettagli tecnici riguardanti la costruzione delle singole schede componenti il RX1-NV LCD modificate per il funzionamento nella frequenze 76-90MHz. L'appendice è composta dalle seguenti sezioni:

This part of the manual contains the technical details about the different boards of the RX1-NV LCD modified for the operation in 76-90MHz frequencies. This appendix is composed of the following sections:

Description	RVR Code	Vers.	Pages
VCO	SLVCORTXLCD01	1.2	4
Front-End RF		1.1	4
	FOUT100M	1.1	

Pagina lasciata intenzionalmente in bianco
This page intentionally left blank

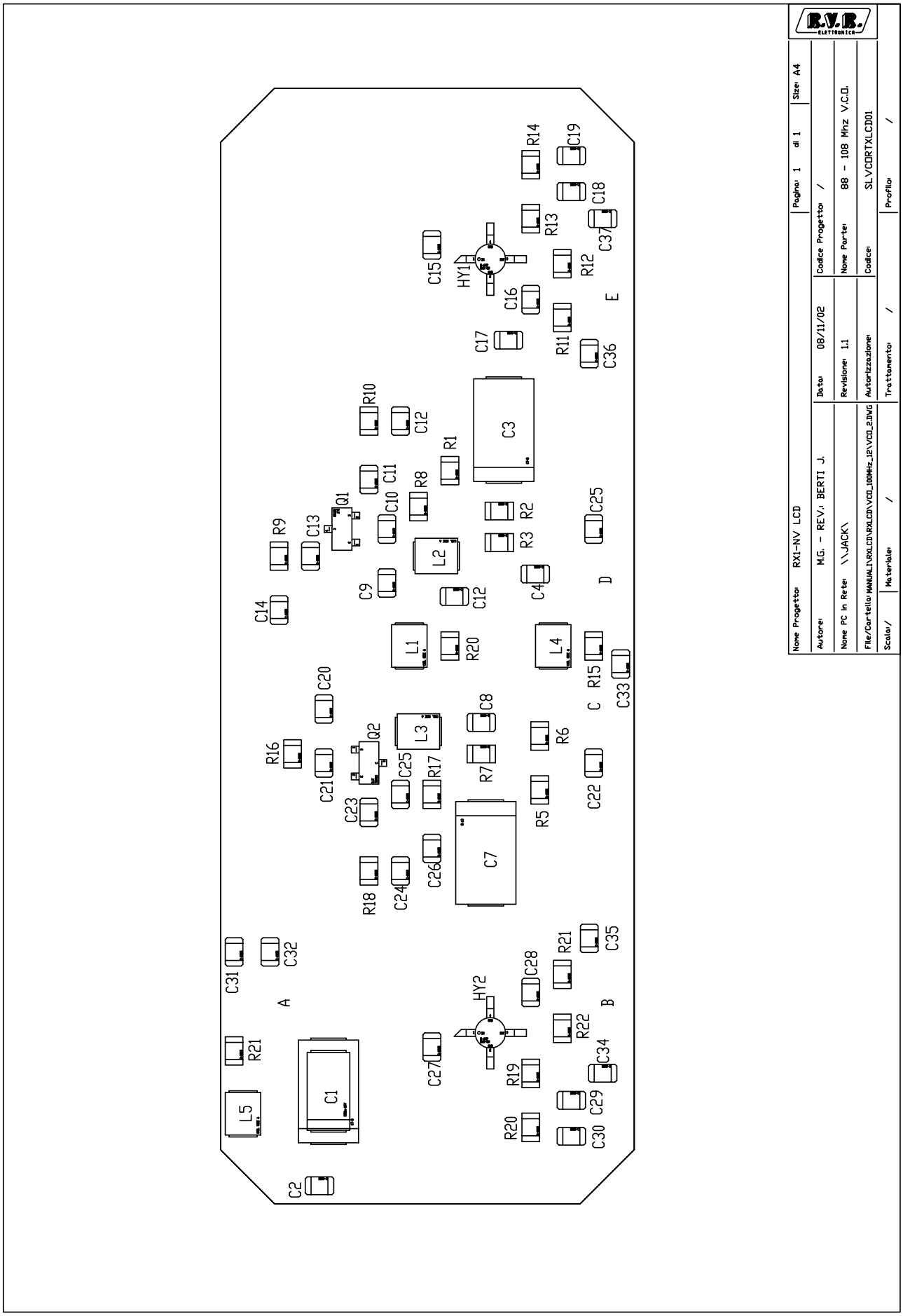
R.V.R. ELETTRONICA
Nome Progetto: RX1-NV LCD
Pagina: 1 di 1
Size: A4
Autore: M.G. - REV.: BERTI J.
Data: 08/11/02
Codice Progetto: /
None PC in Rete: \\JACK\
Revisione: 1.1
None Parte: 88 - 108 Mhz V.C.O.
File/Cartella: MANUALI\RXLCD\RXLCD\VCO_100MHz_12\VCO_2.DWG
Autorizzazione:
Codice: SLVCORTXLCD01
Scala: /
Materiale: /
Trattamento: /
Profilo: /
C1
C2
C3
C4
C5
C6
C7
C8
C9
C10
C11
C12
C13
C14
C15
C16
C17
C18
C19
C20
C21
C22
C23
C24
C25
C26
C27
C28
C29
C30
C31
C32
C33
C34
C35
C36
C37
L1
L2
L3
L4
L5
Q1
Q2
R1
R2
R3
R4
R5
R6
R7
R8
R9
R10
R11
R12
R13
R14
R15
R16
R17
R18
R19
R20
R21
R22
HY1
HY2
A
B
C
D
E

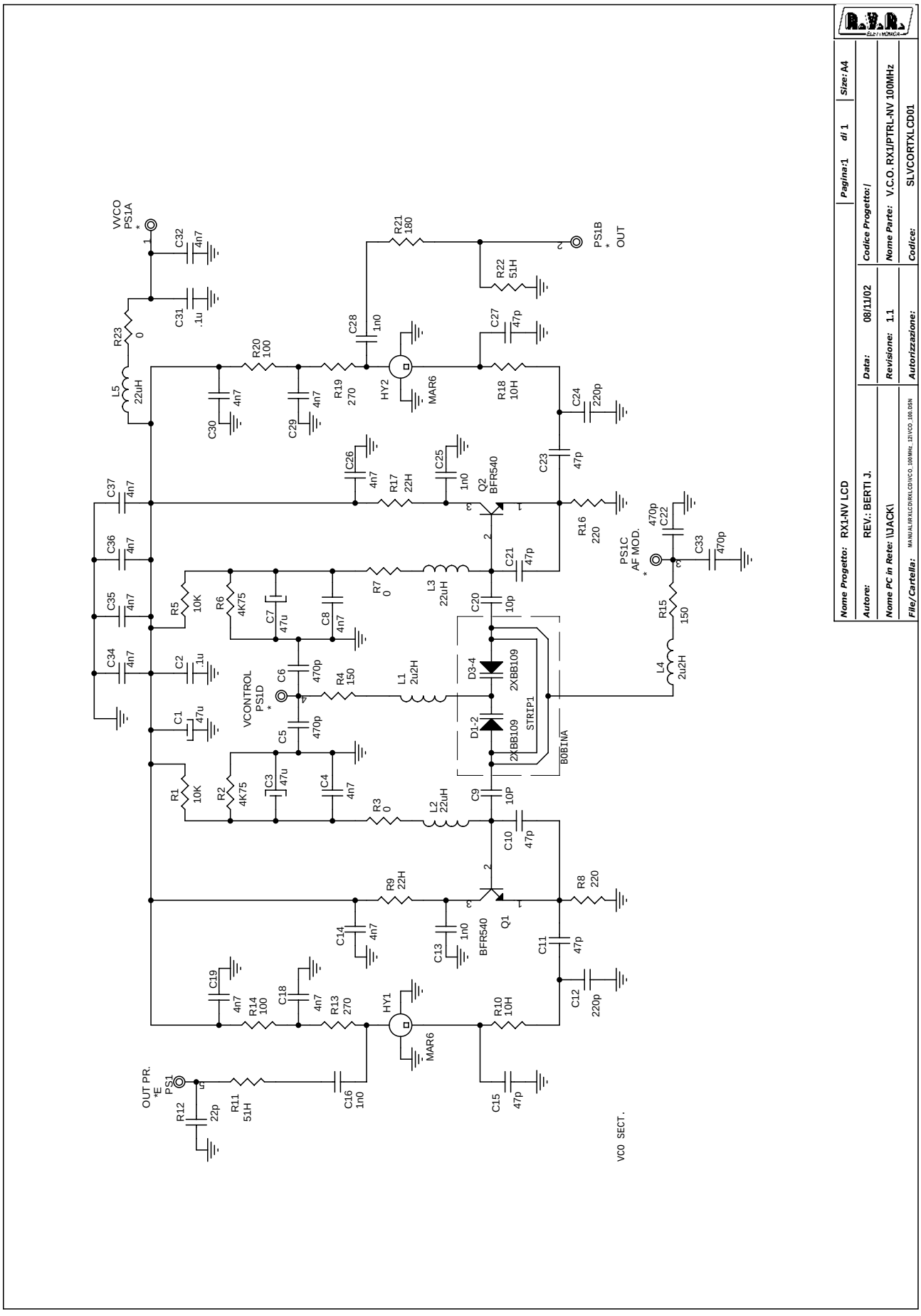
VCO
PS1A
PS1B
OUT
PS1C
AF MOD.
VCONTROL
PS1D
OUT PR.
PS1
VCO SECT.
HY1
HY2
MAR6
Q1
Q2
BFR540
D1-2
D3-4
2XBB109
STRIP1
BOBINA
Nome Progetto: RX1-NV LCD
Pagina:1 di 1
Size: A4
Autore: REV.: BERTI J.
Data: 08/11/02
Codice Progetto: /
Nome PC in Rete: \\JACK\
Revisione: 1.1
Nome Parte: V.C.O. RX1/PTRL-NV 100MHz
File/Cartella: MANUALI\RX1LCD\RX1LCD\VCO_100MHz_12\VCO_100.DSN
Autorizzazione:
Codice: SLVCORTXLCD01

SLVCORTXLCD01 Bill Of Materials Page 1

Item	Quant.	Reference	Part	Description	Code
1	3	C1,C3,C7	47u	COND. EL. SMD16V	
2	2	C2,C31	.1u	COND. CHIP 0805	
3	13	C4,C8,C14,C18, C19,C26,C29,C30, C32,C34,C35,C36, C37	4n7	COND. CHIP 0805	
4	4	C5,C6,C22,C33	470p	COND. CHIP 0805	
5	2	C20,C9	10p	COND. CHIP 0805	
6	6	C10,C11,C15,C21, C23,C27	47p	COND. CHIP 0805	
7	2	C12,C24	220p	COND. CHIP 0805	
8	4	C13,C16,C25,C28	1n0	COND. CHIP 0805	
9	4	D1,D2,D3,D4	MMBV109	DIODO VARICAP SOT23	
10	2	HY1,HY2	MAR6	MODULO IBR. MAR6	
11	2	L1,L4	2u2H	IMPEDENZA SMD 1210	
12	3	L2,L3,L5	22uH	IMPEDENZA SMD 1210	
13	2	Q1,Q2	BFR540	TRANSISTOR SOT23	
14	2	R5,R1	10K	RES. SMD 0805 5%	
15	2	R2,R6	4K75	RES. SMD 0805 1%	
16	3	R3,R7,R23	0	RES. SMD O OHM	
17	2	R4,R15	150	RES. SMD 0805 5%	
18	2	R8,R16	220	RES. SMD 0805 5%	
19	2	R9,R17	22H	RES. SMD 0805 5%	
20	2	R10,R18	10H	RES. SMD 0805 5%	
21	2	R11,R22	51H	RES. SMD 0805 5%	
22	1	R12	22p	COND. CHIP 0805	
23	2	R13,R19	270	RES. SMD 0805 5%	
24	2	R20,R14	100	RES. SMD 0805 5%	
25	1	R21	180	RES. SMD 0805 5%	

Pagina lasciata intenzionalmente in bianco

This page was intentionally left blank

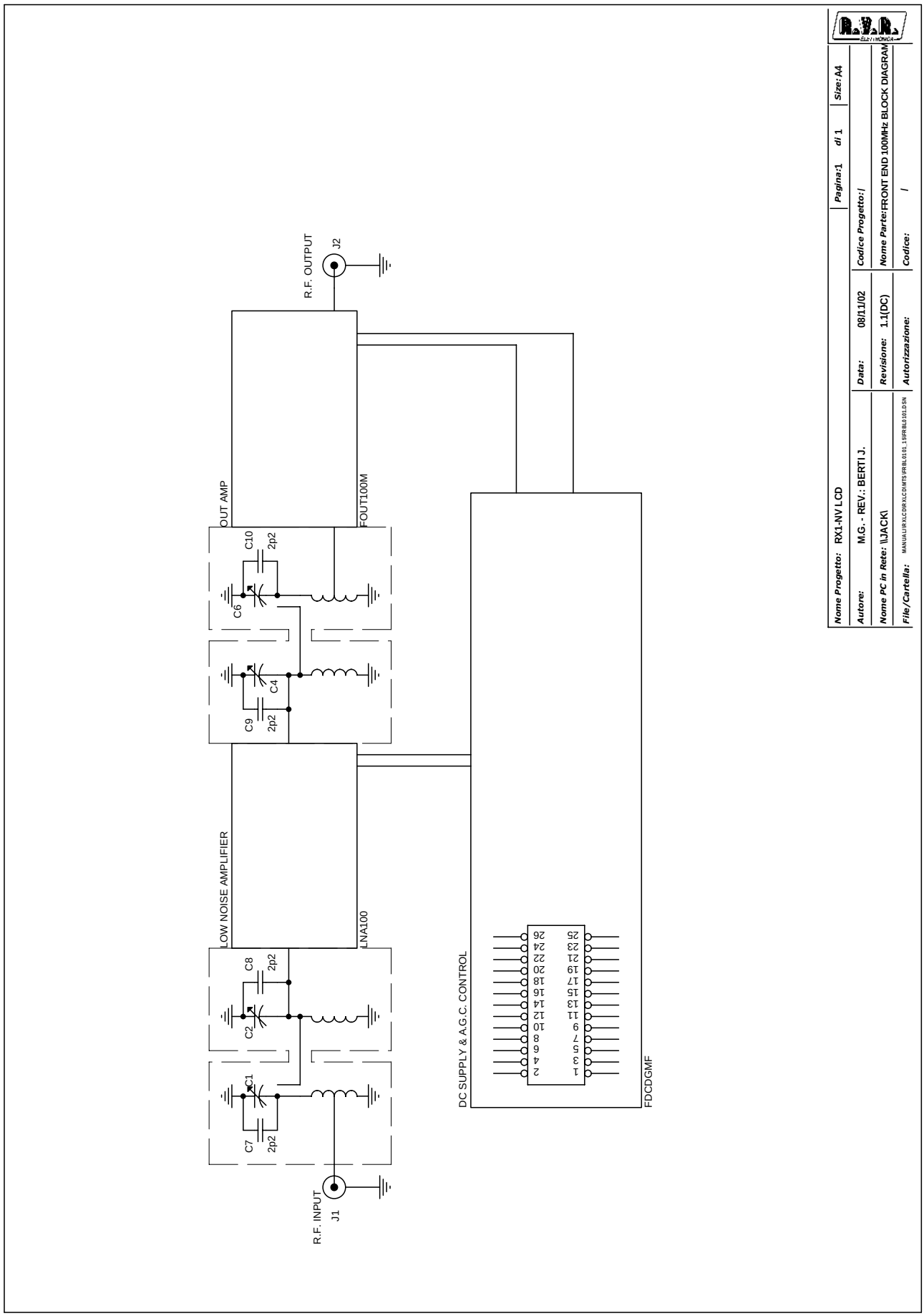
R.F. OUTPUT
J2
OUT AMP
FOUT100M
C10
2p2
C6
C4
C9
2p2
LOW NOISE AMPLIFIER
LNA100
C8
2p2
C2
C1
C7
2p2
R.F. INPUT
J1
DC SUPPLY & A.G.C. CONTROL
FDCDGMF
Nome Progetto: RX1-NV LCD
Pagina:1 di 1
Size: A4
Autore: M.G. - REV.: BERTI J.
Data: 08/11/02
Codice Progetto: /
Nome PC in Rete: \\JACK\
Revisione: 1.1(DC)
Nome Parte: FRONT END 100MHz BLOCK DIAGRAM
File/Cartella:
Autorizzazione:
Codice: /

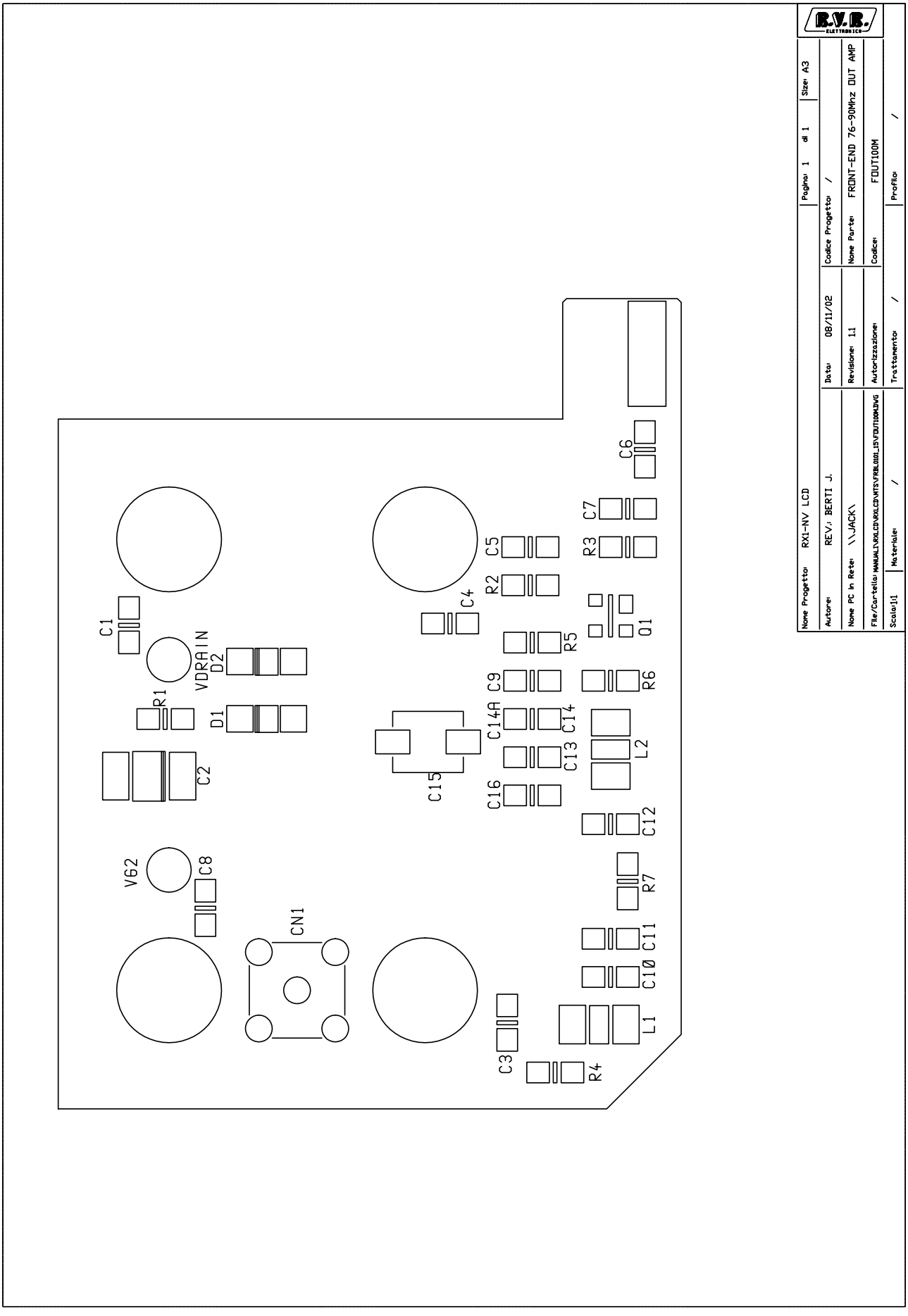
R.V.R. ELETTRONICA
Nome Progetto: RX1-NV LCD
Pagina: 1 di 1
Size: A3
Autore: REV.: BERTI J.
Data: 08/11/02
Codice Progetto: /
Nome PC in Rete: \\JACK\
Revisione: 1.1
Nome Parte: FRONT-END 76-90Mhz OUT AMP
File/Cartella: MANUALI\RXLCD\RXLCD\MTSVFRBL0101_1SVFDUT100M3VG
Autorizzazione:
Codice: FDUT100M
Scala: 1:1
Materiale: /
Trattamento: /
Profilo: /
C1
VDRAIN
D2
R1
D1
C2
V62
C8
CN1
C3
R4
L1
C10
C11
R7
C12
L2
C13
C14
C14A
C9
C15
C16
R5
R2
C5
C4
R3
C7
C6
Q1
R6

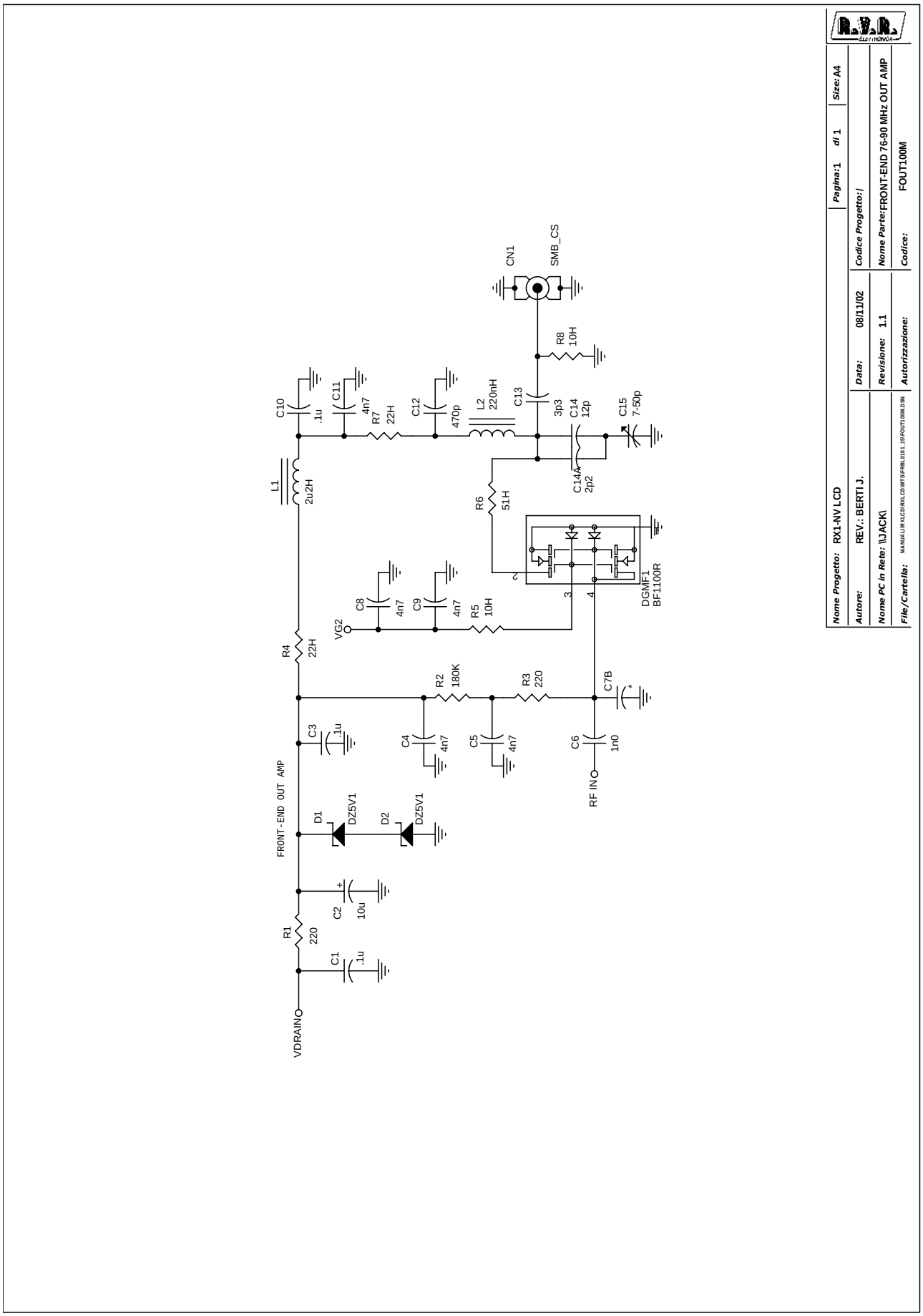
VDRAIN
R1
220
C1
.1u
C2
10u
FRONT-END OUT AMP
D1
DZ5V1
D2
DZ5V1
C3
.1u
R4
22H
C4
4n7
C5
4n7
R2
180K
R3
220
C6
1n0
RF IN
C7B
VG2
C8
4n7
C9
4n7
R5
10H
DGMF1
BF1100R
L1
2u2H
C10
.1u
C11
4n7
R7
22H
C12
470p
L2
220nH
C13
3p3
C14
12p
C14A
2p2
C15
7-50p
R6
51H
R8
10H
CN1
SMB_CS
Nome Progetto: RX1-NV LCD
Pagina:1 di 1
Size:A4
Autore: REV.: BERTI J.
Data: 08/11/02
Codice Progetto:/
Nome PC in Rete: \\JACK\
Revisione: 1.1
Nome Parte:FRONT-END 76-90 MHz OUT AMP
File/Cartella: MANUALI\RXLCD\RXLCD\MTS\FRBL0101_15\FOUT100M.DSN
Autorizzazione:
Codice: FOUT100M

R.V.R. ELETTRONICA Spa Revised: October 13, 2000
FOUT100M Revision: 1.0
Bill Of Materials October 13, 2000 17:30:26 Page 1

Item	Quant.	Reference	Part	Description
1	1	CN1	SMB_CS	CONN.SMB A STAMPATO
2	3	C1,C3,C10	.1u	COND. CHIP 0805
3	1	C2	10u	COND. EL. SMD16V
4	5	C4,C5,C8,C9,C11	4n7	COND. CHIP 0805
5	1	C6	1n0	COND. CHIP 0805
6	1	C7B	*	
7	1	C12	470p	COND. CHIP 0805
8	1	C13	3p3	COND. CHIP 0805
9	1	C14	12p	COND. CHIP 0805
10	1	C15	7-50p	
11	1	DGMF1	BF1100R	DG MOSFET SOT143R
12	2	D1,D2	DZ5V1	DIODO ZENER SMD 5V1
13	1	L1	2u2H	IMPEDENZA SMD 1210
14	1	L2	220nH	IMPEDENZA SMD 1210
15	2	R3,R1	220	RES. SMD 0805 5%
16	1	R2	180K	RES. SMD 0805 5%
17	2	R4,R7	22H	RES. SMD 0805 5%
18	2	R5,R8	10H	RES. SMD 0805 5%
19	1	R6	51H	RES. SMD 0805 5%